# Agenda
# Village of Glen Ellyn
# Special Village Board Workshop
# Monday, January 23, 2012
# 6:30 P.M.
# Galligan Board Room
# Glen Ellyn Civic Center

| | | **Minutes** |
|---|---|---|
| 1. | Call to Order | |
| 2. | District 87 Variation Requests | |
| | a. Welcome and Roll Call | 5 |
| | b. Village Attorney Process Explanation | 10 |
| | c. Village Management Presentation | 15 |
| | d. District 87 Presentation | 30 |
| | e. Our Field Our Town Presentation | 30 |
| | f. Village Board – Questions for Village Management, District 87, and Our Field Our Town | 60 |
| | g. Public Comment | 60 |
| | h. Village Board – Questions or Requests for Further Information | 15 |
| 3. | Other Items? | |
| 4. | Motion to adjourn to Executive Session for the purposes of discussing the appointment, employment, compensation, discipline, performance or dismissal of specific employees, setting the price for sale or lease of property, and pending litigation, and adjourning thereafter without returning to open session. *(Trustee Ladesic)* | |

**Special Board Workshop**
**January 23, 2012**

# MEMORANDUM

**TO:** Mark Franz, Village Manager

**FROM:** Staci Hulseberg, Planning and Development Director SH
Michele Stegall, Village Planner MS

**DATE:** January 12, 2012

**RE:** Memorial Field Variation Requests

**Background**. Glenbard Township High School District 87, owner of Memorial Park (aka Memorial Field) located at 671 Crescent Boulevard is requesting approval of variations from the Glen Ellyn Zoning Code to accommodate new impervious surfaces, bleachers, fencing, an ornamental gate, batting cage and lights. In 2010, the School District received approval of variations by the adoption of Ordinance 5888 to allow the construction of new dugouts, sidewalks and a paver path and patio. A new turf field was also installed around this time. The currently requested variations would accommodate the next phase of improvements.

In accordance with Section 10-10-16 of the Zoning Code, zoning approvals are valid for 18 months, unless the Village Board extends the length of the approval by Ordinance. The School District is requesting that, if approved, the currently requested variations be valid for 5 years in order to allow the District to phase in the improvements. The Village has allowed an extended timeframe for phased projects in the past. To the best of staff's knowledge, an anticipated construction schedule for the improvements has not yet been established.

The subject property is located on the south side of Crescent Boulevard between Park Boulevard and Park Row in the CR Conservation Recreation District. The site is comprised of 8.1 acres. The surrounding zoning and land uses are as follows:

| | Land Use | Zoning |
|---|---|---|
| North: | Glenbard West High School | R2 |
| South: | Railroad, Prairie Path, Residential | CR, R4, R2 |
| East: | Single-Family | R2 |
| West: | Commercial | C5B |

To accommodate the project, the School District is specifically requesting approval of the following zoning variations.

1. A variation from Section 10-5-5(B)4(3) of the Zoning Code to allow an ornamental gate with a height of 14 feet in lieu of the maximum height of 10 feet permitted.

2. A variation from Section 10-5-5(B)4(11) to allow a fence along Crescent Boulevard with a height of 6 feet 6 inches in lieu of the maximum height of 4 feet permitted.

3. A variation from Section 10-5-5(B)4(32) of the Zoning Code to allow a batting cage with a setback of 1 foot from the southern property line in lieu of the minimum setback of 58.14 feet required.

4. A variation from Section 10-5-5(C)1 of the Zoning Code to allow an impervious surface setback of as little as 7.5 feet for a proposed sidewalk along the southern property line and 0 feet to accommodate the base for the bleachers proposed along the northern property line in lieu of the minimum impervious surface setback of 29.07 feet required.

5. A variation from Section 10-5-4(A)2(a) to allow a total of 4,268 square feet of accessory structures on the property in lieu of the maximum of 1,000 square feet of accessory structures permitted *(amendment to previous variation approved by Ordinance 5888).*

6. Variations from Sections 10-5-4(A)4(a) and 10-5-4(A)4(c) of the Zoning Code to allow bleachers to be located 0 feet from the northern property line in lieu of the minimum 18 foot and 29.07 foot accessory structure setbacks required.

7. A variation from Section 10-5-13(M)2(b)1 of the Zoning Code to allow 70 foot tall light poles to be spaced as close as 210 feet apart in lieu of the minimum separation of 280 feet required; to allow 70 foot tall and 60 foot tall light poles to be spaced as close as 106 feet apart in lieu of the minimum separation of 260 feet required; to allow 60 foot tall light poles to be spaced as close as 78 feet apart in the lieu of the minimum separation of 240 feet required; and to allow 60 foot tall and 70 foot tall light poles to be spaced as close as 23 and 37 feet apart respectfully from the existing 30 foot tall tennis court light poles in lieu of the minimum separation of 180 feet and 200 feet required.

8. A variation from Section 10-5-13(M)2(a)2 of the Zoning Code to allow foot-candle levels as high as 8.49 along the southern property line and 7.32 along the northern property line in lieu of the maximum foot-candle level of 3.0 permitted.

9. A variation from Section 10-5-13(M)2(c) to allow the height of the proposed light poles to exceed the height of the approximately 30 foot tall principal building on the site.

The attached Plan Commission staff report includes a brief summary of the proposed improvements. More detailed information about the requests can be found in the petitioner's application packet.

**Issues**. A majority of the comments submitted to the Plan Commission and testimony presented at the hearings related to the variation requests for the proposed lights. The main concerns of those in opposition to the requests related to character, noise, pedestrian safety and traffic safety. A wealth of information was submitted by the petitioner and public about these issues. All of the documents submitted to the Plan Commission are attached. Police Chief Norton and Village lighting consultant James Darnell addressed questions from the Commission related to many of these issues. Their testimony can be found in the November 30, 2011 transcripts. A memorandum from James Darnell is also attached. Mr. Darnell plans to attend the January 23, 2011 and January 30, 2011 Village Board meetings in the event there are any questions for him from the Village Board.

Another issue raised by some opposing the requests relates to the Village's interpretation of the zoning regulations for "Sport Courts". These regulations were adopted on January 22, 2007 and were intended to address issues with hard surface courts being installed in the backyards of single-family homes. Some of those opposing the requests have argued that the Sport Court regulations should apply to the turf field. Staff plans to bring forward a text amendment in the near future to clarify the Code to better reflect the intent of these regulations.

**Recommendation**. The Plan Commission considered the requested variations at a total of 11 public meetings and hearings held on August 25, 2011, September 8, 2011, September 22, 2011, September 29, 2011, October 12, 2011, October 20, 2011, October 27, 2011; November 16, 2011, November 17, 2011, November 30, 2011 and December 20, 2011. This is the most meetings on a request that we are aware of. Throughout the course of the public hearings, a total of 21 individuals, including representatives from Our Field Our Town, spoke in opposition to the requests and 22 people spoke in favor of the request. One person spoke and made general comments about the application but was neither in favor nor against. Correspondence was also received from 75 individuals in favor to the request and 29 individuals in opposition of the request. An additional 10 people sent in general correspondence neither in favor of nor in opposition to the application. Some of the individuals that spoke at the meetings also submitted correspondence and a handful of individuals submitted more than one letter or email. Resolutions from the Historic Preservation Commission and Environmental Commission opposing the requests were also submitted and a resolution in support of the requests was submitted by the Glenbard West Boosters. All of the submitted correspondence and resolutions are attached along with copies of the minutes and transcripts from the 11 Plan Commission meetings. Four additional letters, one in favor and three in opposition, have been received since the December 20, 2011 Plan Commission meeting and are attached. Also attached are copies of the various PowerPoint presentations and other materials presented at the Plan Commission meetings. An audio recording of noise at the field is also available if any Trustees would like to hear it.

After considering all of the evidence submitted and testimony presented, the Plan Commission recommended approval of the requests by way of 4 separate votes. Variation 1 above related to the height of the gate was also recommended for approval by a vote of 7-2. Variation 2 related to the height of the fence was recommended for approval by a vote of 7-2. Variations 3-6 related to the impervious surfaces, bleachers, batting cage and total area of accessory structures were recommended for approval by a vote of 8-1. Variations 7-9 related to the lights were recommended for approval by a vote of 6-3. The Plan Commission recommended that the variations for the lights be approved subject to the following conditions:

A. The improvements shall be constructed in substantial conformance with the plans as submitted and the testimony presented at the August 25, 2011; September 8, 2011; September 22, 2011; September 29, 2011; October 12, 2011; October 20, 2011; October 27, 2011; November 16, 2011; November 17, 2011; and November 30, 2011 public hearings before the Plan Commission.

B. The lights shall not be used on evenings when the field is not in use.

C. The lights shall be turned off no later than 9:00 p.m. on any evening that the lights are permitted to be used.

D. The lights shall not be used on Saturday or Sunday nights.

E. The lights shall not be used between June 1 and August 14 of each year.

F. The lights shall not be used by any third party user.

G. The School District shall form an advisory group which shall include school district administrative staff, a Village representative and residents from the surrounding area to discuss any issues related to the use of the property that may impact the surrounding property owners. The advisory group shall meet a minimum of once a year and, at their discretion, may choose to meet more often. Minutes from all such advisory group meetings shall be promptly shared with the Village.

H. The lights shall not be used in the morning prior to the start of the school day.

I. No amplification/sound system shall be used after 7:00 p.m. when the lights are being used.

The Commission also discussed another potential condition requiring the installation of additional landscaping along the southern property line which would include the use of evergreens. The Commission eventually agreed to leave this as a suggestion rather than a recommended condition of approval, but requested that the Village Board be made aware that this suggestion was made to the School District.

**Action Requested**. The Village Board may approve, approve with conditions or deny the petitioner's requests for approval of the requested zoning variations. In accordance with the Plan Commission's recommendation a draft Ordinance has been prepared approving the requests.

Attachments: Draft Ordinance Approving Requests

DRAFT

**Village Of Glen Ellyn**

---

**Ordinance No. _____**

**An Ordinance Approving Variation Requests to Allow Improvements to Memorial Park Located at 671 Crescent Boulevard to Accommodate New Impervious Surfaces, Bleachers, Fencing, an Ornamental Gate, Batting Cage and Lights and Amending Ordinance 5888 to Allow an Increase in the Total Square Footage of Accessory Structures on the Property Glen Ellyn, Illinois 60137**

---

**Adopted by the**
**President and the Board of Trustees**
**of the Village of Glen Ellyn**
**DuPage County, Illinois**
**This ____ Day of _____, 20_____.**

---

Published in pamphlet form by the authority of the President and Board of Trustees of the Village of Glen Ellyn, DuPage County, Illinois, this _____ day of _____, 20_____.

**Ordinance No. _____**

**An Ordinance Approving Variation Requests to Allow Improvement to Memorial Park Located at 671 Crescent Boulevard to Accommodate New Impervious Surfaces, Bleachers, Fencing, an Ornamental Gate, Batting Cage and Lights and Amending Ordinance 5888 to Allow an Increase in the Total Square Footage of Accessory Structures on the Property Glen Ellyn, Illinois 60137**

**Whereas**, Glenbard High School District 87, owner of Memorial Park located on property commonly known as 671 Crescent Boulevard, is requesting approval of the following variations from the Glen Ellyn Zoning Code:

1. A variation from Section 10-5-5(B)4(3) of the Zoning Code to allow an ornamental gate with a height of 14 feet in lieu of the maximum height of 10 feet permitted;

2. A variation from Section 10-5-5(B)4(11) to allow a fence along Crescent Boulevard with a height of 6 feet 6 inches in lieu of the maximum height of 4 feet permitted;

3. A variation from Section 10-5-5(B)4(32) of the Zoning Code to allow a batting cage with a setback of 1 foot from the southern property line in lieu of the minimum setback of 58.14 feet required;

4. A variation from Section 10-5-5(C)1 of the Zoning Code to allow an impervious surface setback of as little as 7.5 feet for a proposed sidewalk along the southern property line and 0 feet to accommodate the base for bleachers proposed along the northern property line in lieu of the minimum impervious surface setback of 29.07 feet required;

5. An amendment to the variation from Section 10-5-4(A)2(a) of the Zoning Code previously granted by Ordinance 5888 to allow a total of 4,268 square feet of accessory structures on the property in lieu of the maximum of 1,000 square feet of accessory structures permitted;

6. Variations from Sections 10-5-4(A)4(a) and 10-5-4(A)4(c) of the Zoning Code to allow bleachers to be located 0 feet from the northern property line in lieu of the minimum 18 foot and 29.07 foot accessory structure setbacks required;

7. A variation from Section 10-5-13(M)2(b)1 of the Zoning Code to allow 70 foot tall light poles to be spaced as close as 210 feet apart in lieu of the minimum separation of 280 feet required; to allow 70 foot tall and 60 foot tall light poles to be spaced as close as 106 feet apart in lieu of the minimum separation of 260 feet required; to allow 60 foot tall light poles to be spaced as close as 78 feet apart in the lieu of the minimum separation of 240 feet required; and to allow 60 foot tall and 70 foot tall light poles to be spaced as close as 23 and 37 feet apart respectfully from the existing 30 foot tall tennis court light poles in lieu of the minimum separation of 180 feet and 200 feet required;

8. A variation from Section 10-5-13(M)2(a)2 of the Zoning Code to allow foot-candle levels as high as 8.49 along the southern property line and 7.32 along the northern property line in lieu of the maximum foot-candle level of 3.0 permitted; and

9. A variation from Section 10-5-13(M)2(c) to allow the height of the proposed light poles to exceed the height of the approximately 30 foot tall principal building on the site; and

**Whereas,** the above variations are being requested to allow improvements at Memorial Park including new impervious surfaces, bleachers, fencing, an ornamental gate, batting cage and lights; and

**Whereas**, the subject property is located in the CR Conservation Recreation zoning district and is bounded by Crescent Boulevard to the north, the Union Pacific railroad to the south, Park Row to the East and Park Boulevard to the west; and

**Whereas,** the property is legally described as follows:

PARCEL ONE:
LOT 17 IN COUNTY CLERK'S THIRD ASSESSMENT DIVISION IN SECTION 11, TOWNSHIP 39 NORTH, RANGE 10 EAST OF THE THIRD PRINCIPAL MERIDIAN, ACCORDING O THE PLAT THEREOF RECORDED JULY 3, 1906 AS DOCUMENT NUMBER 88053, IN DUPAGE COUNTY, ILLINOIS.

PARCEL TWO:
BLOCK 6 IN WOODTHORP, BEING A SUBDIVISION IN THE SOUTHEAST QUARTER OF SECTION 11, TOWNSHIP 39 NORTH, RANGE 10 EAST OF THE THIRD PRINCIPAL MERIDIAN, ACCORDING TO THE PLAT THEREOF RECORDED JUNE 2, 1926 AS DOCUMENT NUMBER 214660, IN DUPAGE COUNTY, ILLINOIS.

P.I.N.: 05-11-410-014; and

**Whereas**, following due and proper publication of notice in the Daily Herald not less than fifteen (15) nor more than thirty (30) days prior thereto, and following written notice to all property owners within 250 feet, and following the placement of a placard on the subject property not less than fifteen (15) days prior thereto, the Plan Commission of the Village of Glen Ellyn conducted a total of eleven (11) public hearings and meetings on August 25, 2011, September 8, 2011, September 22, 2011, September 29, 2011, October 12, 2011, October 20,

2011, October 27, 2011; November 16, 2011, November 17, 2011, November 30, 2011 and December 20, 2011 at which hearings/meetings the Plan Commission considered the requested Zoning Variations; and

**Whereas,** at the aforementioned public hearings/meetings of the Plan Commission 21 people spoke in opposition to the requests, 22 people spoke in favor of the request and one person spoke and made general comments about the application. Correspondence was also received from 75 individuals in opposition to the request, 29 individuals in favor of the request and 10 letters/emails were received neither in favor of nor in opposition to the application. Resolutions both in favor of and in opposition to the requests were also submitted by different groups; and

**Whereas**, after having considered the evidence presented, including the exhibits and materials submitted, the Plan Commission made its findings of fact and recommendations as set forth in the minutes of the Glen Ellyn Plan Commission dated December 20, 2011, a copy of which is attached hereto as Exhibit "K", and

1. By a vote of 7 "yes" and 2 "no," the Plan Commission recommended approval of the requested Variation from Section 10-5-5(B)4(3) of the Zoning Code to allow an ornamental gate with a height of 14 feet in lieu of the maximum height of 10 feet permitted;
2. By a vote of 7 "yes" and 2 "no" the Plan Commission recommended approval of the requested Variation from Section 10-5-5(B)4(11) of the Zoning Code to allow a fence along Crescent Boulevard with a height of 6 feet 6 inches in lieu of the maximum height of 4 feet permitted;
3. By a vote of 8 "yes" and one "no" the Plan Commission recommended approval of the requested Variations from:

    a. Section 10-5-5(B)4(32) of the Zoning Code to allow a batting cage with a setback of 1 foot from the southern property line in lieu of the minimum setback of 58.14 feet required;

    b. Section 10-5-5(C)1 of the Zoning Code to allow an impervious surface setback of as little as 7.5 feet for a proposed sidewalk along the southern property line and 0 feet to

accommodate the base for bleachers proposed along the northern property line in lieu of the minimum impervious surface setback of 29.07 feet required;

c. An amendment to the variation from Section 10-5-4(A)2(a) of the Zoning Code previously granted by Ordinance 5888 to allow a total of 4,268 square feet of accessory structures on the property in lieu of the maximum of 1,000 square feet of accessory structures permitted; and

d. Sections 10-5-4(A)4(a) and 10-5-4(A)4(c) of the Zoning Code to allow the northern bleachers to be located 0 feet from the northern property line in lieu of the minimum 18 foot and 29.07 foot accessory structure setbacks required; and

4. By a vote of 6 "yes" and 3 "no", the Plan Commission recommended approval of the requested Variations from:

a. Section 10-5-13(M)2(b)1 of the Zoning Code to allow 70 foot tall light poles to be spaced as close as 210 feet apart in lieu of the minimum separation of 280 feet required; to allow 70 foot tall and 60 foot tall light poles to be spaced as close as 106 feet apart in lieu of the minimum separation of 260 feet required; to allow 60 foot tall light poles to be spaced as close as 78 feet apart in the lieu of the minimum separation of 240 feet required; and to allow 60 foot tall and 70 foot tall light poles to be spaced as close as 23 and 37 feet apart respectfully from the existing 30 foot tall tennis court light poles in lieu of the minimum separation of 180 feet and 200 feet required;

b. Section 10-5-13(M)2(a)2 of the Zoning Code to allow foot-candle levels as high as 8.49 along the southern property line and 7.32 along the northern property line in lieu of the maximum foot-candle level of 3.0 permitted;

c. Section 10-5-13(M)2(c) to allow the height of the proposed light poles to exceed the height of the approximately 30 foot tall principal building on the site; and

**Whereas**, the Village President and Board of Trustees have reviewed the evidence, exhibits and materials presented at the August 25, 2011, September 8, 2011, September 22, 2011, September 29, 2011, October 12, 2011, October 20, 2011, October 27, 2011; November 16, 2011, November 17, 2011, November 30, 2011 and December 20, 2011 public hearings and meetings before the Plan Commission and have considered the findings of fact and recommendations of the Plan Commission; and

**Whereas**, the President and Board of Trustees further considered the requests at public meetings on January 23, 2012 and January 30, 2012; and

**Whereas**, based on the recommendation of the Plan Commission and a review of the

evidence, materials and testimony presented, the Village President and Board of Trustees have determined that granting the requested Zoning Variations is consistent with the goals of the Glen Ellyn Zoning Code.

**Now, Therefore, be it Ordained by the President and Board of Trustees of the Village of Glen Ellyn, DuPage County, Illinois**, in the exercise of its home rule powers, as follows:

**Section One:** The August 25, 2011, September 8, 2011, September 22, 2011, September 29, 2011, October 12, 2011, October 20, 2011, October 27, 2011; November 16, 2011, November 17, 2011, November 30, 2011 and December 20, 2011 minutes of the Glen Ellyn Plan Commission are hereby attached for reference as Exhibits "A-K".

**Section Two:** Based on upon a review of the evidence, exhibits and materials presented at the eleven (11) public hearings and meetings before the Plan Commission and the subsequent meetings of the Village Board, the Village Board hereby adopts the findings of fact for the requested variations set forth in Exhibit "L" attached hereto.

**Section Three:** Based upon the findings of fact attached hereto as Exhibit "L", the Village President and Board of Trustees hereby grant approval of the requested Zoning Variations to allow improvements at Memorial Park including new impervious surfaces, bleachers, fencing, an ornamental gate, batting cage and lights.

**Section Four:** This grant of approval of the requested Zoning Variations is subject to the following conditions:

A. The project shall be constructed and maintained in substantial conformance with the plans submitted and the testimony presented at the August 25, 2011, September 8, 2011, September 22, 2011, September 29, 2011, October 12, 2011, October 20, 2011, October 27, 2011; November 16, 2011, November 17, 2011, November 30, 2011 Plan Commission public hearings and with the petitioner's application packet stamped received August 11, 2011 including the following plans and documents as though they were attached to this Ordinance:

1. Cover Letter from Chris McClain revised August 9, 2011
2. Narrative Statement/Use Description revised August 9, 2011
3. Application for Variation revised August 9, 2011
4. Quantitative Summary revised August 9, 2011
5. Evidence Related to Zoning Code Standards for a Variation revised August 9, 2011
6. Softball Field Photometric Plan dated July 18, 2011
7. Blanket Grid Photometric Plan dated July 18, 2011
8. Football Field Photometric Plan dated July 18, 2011
9. Soccer Field Photometric Plan dated July 18, 2011
10. Crescent Boulevard Spill Photometric Plan dated July 18, 2011, a reduced copy of which is attached hereto as Exhibit "M"
11. Property Line Spill Photometric Plan dated July 18, 2011, a reduced copy of which is attached hereto as Exhibit "N"
12. Property Line 5' Offset Photometric Plan dated July 18, 2011
13. Musco Light Fixture Cut Sheets, a copy of which is attached hereto as Exhibit "0"
14. Bleacher Section and Plan dated May 12, 2011, a copy of which is attached hereto as Exhibit "P"
15. Field Lighting Information a copy of which is attached hereto as Exhibit "Q"
16. Field Lighting Reflector Design prepared by Musco Lighting
17. Dimensional Control and Paving Plan revised May 12, 2011 a copy of which is attached hereto as Exhibit "R"
18. Grading and Erosion Control Plan revised May 12, 2011

and these plans and documents shall be filed with and made part of the permanent records of the Glen Ellyn Planning and Development Department.

B. Variations 7-9 identified in the preambles herein above related to the lights are also subject to the following conditions:

1. The lights shall not be used on evenings when the field is not in use.

2. The lights shall be turned off no later than 9:00 p.m. on any evening that the lights are permitted to be used.

3. The lights shall not be used on Saturday or Sunday nights.

4. The lights shall not be used between June 1 and August 14 of each year.

5. The lights shall not be used by any third party user.

6. The School District shall form an advisory group which shall include school district administrative staff, a Village representative and residents from the surrounding area to discuss any issues related to the use of the property that may impact the surrounding property owners. The advisory group shall meet a minimum of once a year and, at their discretion, may choose to meet more often. Minutes from all such advisory group meetings shall be promptly shared with the Village.

7. The lights shall not be used in the morning prior to the start of the school day.

8. No amplification/sound system shall be used after 7:00 p.m. when the lights are being used.

**Section Five**: This grant of approval of the requested Zoning Variations shall expire and become null and void within five (5) years of the date of this Ordinance unless construction of the improvements for which the requested Zoning Variations have been granted is complete, provided, however, that the Village Board, by motion, may extend the length of this approval. Further, the Village Board may, for good cause shown, waive or modify any conditions set forth in this Ordinance without requiring that the matter return for public hearing.

**Section Six**: This Ordinance shall be in full force and effect from and after the passage, approval, and publication in pamphlet form.

**Section Seven**: Failure of the owners or other party in interest or a subsequent owner or other party in interest to comply with the terms of this Ordinance, after execution of such Ordinance, shall subject the owners or party in interest to the penalties set forth in Section 10-10-18 (A) and (B) of the Village of Glen Ellyn Zoning Code.

**Section Eight**. The Village Clerk is hereby authorized to record this Ordinance with the DuPage County Recorder.

**Passed** by the President and Board of Trustees of the Village of Glen Ellyn, Illinois, this _____ day of _____, 20_____.

**Ayes:**

**Nays:**

**Absent:**

**Approved** by the Village President of the Village of Glen Ellyn, Illinois, this

_____ day of _____, 20_____.

_____
Village President of the
Village of Glen Ellyn, Illinois

**Attest:**

_____
Village Clerk of the
Village of Glen Ellyn, Illinois

(Published in pamphlet form and posted on the ___ day of _____.)

**X:\Plandev\PLANNING\DEVELOPMENT PROJECTS\Crescent\Crescent 670, Glenbard West High School\Memorial Field\Phase II - Lights, etc. ZV\Ordinance 011012.docx**

**EXHIBIT "L"**
**FINDINGS OF FACT**

**The following findings are fact are hereby adopted for the requested variation from Section 10-5-5(B)4(3) of the Zoning Code to allow an ornamental gate with a height of 14 feet in lieu of the maximum height of 10 feet.**

1. If granted, the requested variation will not alter the essential character of the locality because the increased height of the ornamental entrance gate will serve to enhance visibility of the main entrance and is attractively designed to fit in with the surrounding area. In addition, testimony was given that the gate was designed to reflect the original gate located on the north side of Crescent Boulevard.

2. The petitioner has demonstrated a particular hardship as a result of adhering to the strict letter of the regulations of the Zoning Code because the purpose of the gate is to assist wayfinding and to define the location of the main entrance which is aligned with the Crescent Boulevard pedestrian crosswalk.

3. The plight of the owner is due to unique circumstances because the site is located across the street from the school and it is important to provide a readily visible and identifiable entrance to the property for the safety of students and others crossing the street to use the facility.

**The following findings of fact are hereby adopted for the requested variation from Section 10-5-5(B)4(11) of the Zoning Code to allow a fence along Crescent Boulevard with a height of 6 feet 6 inches in lieu of the maximum height of 4 feet permitted.**

1. If granted, the requested variation will not alter the essential character of the locality because the wrought iron style fence is attractively designed, more than 50% open and in keeping with the character of the area.

2. The petitioner has demonstrated a particular hardship as a result of adhering to the strict letter of the regulations of the Zoning Code because the proposed 6 foot 6 inch tall fence will provide for a safer separation between the site and the adjacent street than a 4 foot tall fence would and will do more to secure the site.

3. The plight of the owner is due to unique circumstances because a major collector street with existing on-street parking is located directly north of the site and the increased height of the fence will provide a safer separation between the site and the adjacent street.

**The following findings are fact are hereby adopted for the requested variation from Section 10-5-5(B)4(32) of the Zoning Code to allow a batting cage with a setback of 1 foot from the southern property line in lieu of the minimum setback of 58.14 feet required.**

1. If granted, the requested variation will not alter the essential character of the locality because an existing basketball court is currently located in this area and extends over the property line. The proposed batting cage will have a greater setback than the existing basketball court

and the total area of the batting cage will be less than the area of the existing basketball court. In addition, the proposed change from a basketball court to a batting cage will not result in a significant change of use since both uses are recreational uses. The subject area is also located adjacent to the railroad and is buffered by trees.

2. The petitioner has demonstrated a particular hardship as a result of adhering to the strict letter of the regulations of the Zoning Code because the irregular triangular shape of the property and the unusually lengthy lot width along Park Row of 581 feet creates a hardship in developing the property in accordance with the strict regulations of the Zoning Code as it results in an unusually large required setback for the batting cage which is greater than the required 50 foot front yard setback for a principal structure on the lot and almost as much as the required 60 foot rear yard setback for a principal structure on the lot.

3. The plight of the owner is due to unique circumstances because of the triangular shape of the property and the unusually lengthy lot width along Park Row of 581 feet which is used to determine the required setback.

**The following findings are fact are hereby adopted for the requested variations from a.) Section 10-5-5(C)1 of the Zoning Code to allow an impervious surface setback of as little as 7.5 feet for a proposed sidewalk along the southern property line and 0 feet along the northern property line to accommodate the base for the northern bleachers in lieu of the minimum impervious surface setback of 29.07 feet required; and b.) Sections 10-5-4(A)4(a) and 10-5-4(A)4(c) of the Zoning Code to allow bleachers to be located 0 feet from the northern property line in lieu of the minimum 18 foot and 29.07 foot accessory structure setbacks required.**

1. If granted, the requested variations will not alter the essential character of the locality because the requested variations are located along the northern and southern property lines and the northern property line is located adjacent to a street and the petitioner owns the property on the other side of the street which is also used as a School. The southern property line is directly adjacent to Union Pacific property and railroad tracks, is buffered by trees and is located approximately 180-200 feet away from any residential uses. In some locations, the railroad, a parking lot and trees are located between the southern property line and any residential uses to the south.

2. The petitioner has demonstrated a particular hardship as a result of adhering to the strict letter of the regulations of the Zoning Code because the unusually lengthy lot width along Park Row of 581 feet results in a relatively large required setback around the perimeter of the entire site which creates a hardship in allowing for the reasonable use and development of the property. The hardship is further exacerbated when combined with the irregular triangular shape of the property.

3. The property in question cannot yield a reasonable return if permitted to be used only under the conditions allowed by the regulations governing the district in which it is located because the unusually lengthy lot width along Park Row of 581 feet results in a relatively large required setback around the perimeter of the entire site which, if applied, would impede the

reasonable use and development of the property. The irregular triangular shape of the lot combined with the unusually large required setback further impedes the reasonable use of the property.

4. The plight of the owner is due to unique circumstances because the unusually lengthy lot width along Park Row of 581 feet results in a relatively large required setback around the perimeter of the entire site. In addition, the unusual triangular shape of the property is a unique circumstance because if the required setback was applied around the perimeter of the property, it would significantly impede the petitioner's ability to reasonably use the property and to provide pedestrian and ADA accessibility to some of the amenities on the site.

**The following findings of fact are hereby adopted for the requested amendment to the variation to Section 10-5-4(A)2(a) of the Zoning Code previously approved by Ordinance 5888 to allow a total of 4,268 square feet of accessory structures on the property in lieu of the maximum of 1,000 square feet of accessory structures permitted.**

1. If granted, the requested variation not alter the essential character of the locality because the variation is being requested to allow the construction of an approximately 2,800 square foot bleacher area along the north property line which will be in the same location where temporary bleachers are currently located and to allow the existing portable softball bleachers to remain which have been classified as structures due to the petitioner's intention to keep these bleachers in place year round. Therefore, if granted, the requested variations should have little to no impact on the character of the area because the subject bleachers are already in place. In addition, no evidence that the Village has received any complaints related to the existing temporary bleachers has been received.

2. The petitioner has demonstrated a particular hardship as a result of adhering to the strict letter of the regulations of the Zoning Code because the property is used for fields and other recreational purposes accessory to the school and the existing and proposed accessory structures on the property including the proposed bleachers and existing dugouts are customary and generally associated with such uses. Therefore, without the requested variations, the property would not be able to be used for these purposes.

3. The property in question cannot yield a reasonable return if permitted to be used only under the conditions allowed by the regulations governing the district in which it is located because the property is used for fields and other recreational purposes accessory to the school and the existing and proposed accessory structures on the property including the proposed bleachers and existing dugouts are customary and generally associated with such uses. Therefore, without the requested variations, the property would not be able to be use for these purposes.

4. The plight of the owner is due to unique circumstances because the site is relatively large being comprised of 8.1 acres and the proposed accessory structures would take up less than 1.5% of the site.

**The following supplemental findings of facts are also hereby adopted for all of the variations identified above related to the impervious surfaces, accessory structures, batting cage, gate and fence.**

1. The physical surrounding and shape of the property would bring particular hardship upon the applicant as distinguished from a mere inconvenience if the strict letter of the Zoning Code were to be carried out because the site is located on a major collector street across from the school with existing on-street parking. Therefore, providing a readily identifiable entrance to the property benefits pedestrian safety and providing a taller than normal fence provides enhanced security and safety. In addition, the required impervious surface and accessory structure setbacks are relatively large given the width of the lot and the impact of these variations on surrounding properties should be minimal given that a collector street is located north of the site and the petitioner owns the property across the street to the north which is also used as a school and railroad tracks, a parking lot and trees separate the property from the residential uses to the south and approximately 180-200 feet separate the southern property line from any residential uses.

2. The conditions on which the variations are based are not applicable generally to other property within the same zoning district because the property is part of a school campus which is separated by a street and the main occupants of the site are required to cross a public road in order to access the property. In addition, the property has an unusual triangular shape and a relatively large lot width.

3. The purpose of the variations is not based exclusively upon a desire to make more money out of the property because the owner is a public school district.

4. That the alleged difficulties or particular hardships have not been created by any person presently having an interest in the property or by the applicant because the unusual triangular shape of the lot and the lot width have not been altered by the petitioner.

5. That the granting of the variations will not be detrimental to the public welfare or injurious to other property or improvements in the neighborhood in which it is located because the proposed permanent bleachers, impervious surfaces, entry gate, fencing and batting cage will benefit the users and general public. Furthermore, the proposed permanent seating will provide needed handicap accessible seating/viewing areas for the main field and will replace temporary seating in these locations, the proposed entry gate will provide a dedicated and visible field access point for spectators and enhance the overall campus appearance and the proposed 3rd base walkway and ramp will provide an accessible route to the 3rd base softball bleachers.

6. The requested variations will not:

   a. Impair an adequate supply of light and air to adjacent property because no new buildings are proposed and the property will continue to be used for recreational purposes accessory to the school.

b. Substantially increase the hazard from fire or other dangers to said property or adjacent property because the principal use of the property will not be changing and the primary use will continue to be for recreational purposes accessory to the school.

c. Otherwise impair the public health, safety, comfort, morals or general welfare of the inhabitants of the Village.

d. Diminish or impair property values within the neighborhood because a street is located north of the site and the petitioner owns the property across the street to the north of the site which is also used as part of the school campus. A street also separates the site from the single-family residences to the east. In addition, railroad tracks, a parking lot and trees separate the property from the residential uses to the south and approximately 180-200 feet separate the southern property line from any residential uses.

e. Unduly increase traffic congestion in the public streets and highways because no new access drives are proposed and the primary use of the property will not be changing and will continue to be for recreational purposes accessory to the school.

f. Create a nuisance because the principal use of the property will not be changing and the primary use will continue to be for recreational purposes accessory to the school.

g. Result in an increase in public expenditures because based on the testimony of the Police Chief, no increase in police demand is expected in the area as a result of the requested variations and no improvements are proposed that should create an additional need for other Village services such as water, sewer, roads, etc.

7. The variations are the minimum variations that will make possible the reasonable use of the land, building or structure due to the irregular triangular shape of the lot and relatively large lot width.

---

**The following findings of fact are hereby adopted for the requested variations from a.) Section 10-5-13(M)2(B)1 of the Zoning Code to allow 70 foot tall light poles to be spaced as close as 210 feet apart in lieu of the minimum separation of 280 feet required; to allow 70 foot tall and 60 foot tall light poles to be spaced as close as 106 feet apart in lieu of the minimum separation of 260 feet required; to allow 60 foot tall light poles to be spaced as close as 78 feet apart in lieu of the minimum separation of 240 feet required; and to allow 60 foot tall and 70 foot tall light poles to be spaced as close as 23 and 37 feet apart respectfully from the existing 30 foot tall tennis court light poles in lieu of the minimum separation of 180 feet and 200 feet required; b.) Section 10-5-13(M)2(a)2 of the Zoning Code to allow foot candle levels as high as 8.49 along the southern property line and 7.32 along the northern property line in lieu of the maximum foot candle level of 3.0 permitted; and c.) Section 10-5-13(M)2(c) to allow the height of the proposed light poles to exceed the height of the approximately 30 foot tall principal building on the site:**

1. If granted, the requested variations will not alter the essential character of the locality because the character of the area is a school campus bisected by a major collector street and

the principal use of the property will not be changing. Furthermore, the lights would only be turned on a maximum of 140 nights a year and the lights will not be in use in the summer. Furthermore, a street is located north of the site and the petitioner owns the property across the street to the north of the site which is also used as part of the school campus. A street also separates the site from the single-family residences to the east. In addition, railroad tracks, a parking lot and trees separate and buffer the property from the residential uses to the south and approximately 180-200 feet separates the southern property line from any residential uses. The petitioner provided evidence in the form of cross sections that the impact and visibility of the lights from the residential properties to the south and east will be mitigated and buffered by existing vegetation and distance. In addition, the photometric plans submitted by the petitioner indicate that the proposed foot candle levels will be no greater than .2 at the surrounding residential property lines and will be zero at most of the surrounding residential property lines. A foot candle level of .2 is less than the maximum permitted foot candle level of .3 that would be permitted if the surrounding residential properties were adjacent to the site.

2. The petitioner has demonstrated a particular hardship as a result of adhering to the strict letter of the regulations of the Zoning Code due to the unique requirements for lighting sports fields. The petitioner has submitted evidence that the proposed pole heights, location and foot candle levels are essential to achieve the recommended illumination levels for safe play and the Village's lighting consultant has testified and submitted a written report indicating that the proposed lighting levels on the field are appropriate. Evidence was also submitted by the petitioner that there would be practical difficulties to installing lights at Duchon Field as was suggested by certain members of the public because Duchon Field provides overflow stormwater detention for Lake Ellyn. The petitioner also presented testimony that the need for additional practice field time has increased as the number of sports teams and other extracurricular activities have increased in order to keep pace with other schools and abide by Title 9 requirements. The Zoning Code standards create a practical difficulty in providing the field time needed to support the school's extracurricular programs which have expanded over time.

3. The property in question cannot yield a reasonable return if permitted to be used only under the conditions allowed by the regulations governing the district in which it is located because without the lights, the use of the property will be restricted to daylight hours and the petitioner will not be able to reasonably use the property to accommodate the extracurricular goals of the School District. The petitioner also presented testimony that the need for additional practice field time has increased as the number of sports teams and other extracurricular activities have increased in order to keep pace with other schools and abide by Title 9 requirements. Testimony was also presented that Glenbard West is one of the only schools in DuPage County without a lighted field.

4. The plight of the owner is due to unique circumstances because of the unique requirements for lighting sports fields. The petitioner has submitted evidence that the proposed pole heights, location and foot candle levels are essential to achieve the recommended illumination levels for safe play and the Village's lighting consultant has testified and submitted a written report indicating that the proposed lighting levels on the field are

appropriate. Furthermore, the unique triangular shape of the property limits the site planning options of the various fields and other recreational uses on the site which subsequently impacts potential lighting options in terms of location, height and foot candle levels.

**The following supplement findings of fact for the three variation requests identified hereinabove related to the installation of lights on the property are hereby adopted.**

1. The shape of the property would bring particular hardship upon the applicant as distinguished from a mere inconvenience if the strict letter of the Zoning Code were to be carried out because the site has an irregular triangular shape which limits the site planning options for the property and hence the potential location of light poles and the subsequent foot candle levels at the property lines.

2. The conditions on which the variations are based are not applicable generally to other property within the same zoning district due to the irregular triangular shape of the lot and unusually lengthy lot width.

3. The purpose of the variations is not based exclusively upon a desire to make more money out of the property because the owner is a public school district and has agreed not to rent out the property to any third party users in the evenings when lights would be needed.

4. That the alleged difficulties or particular hardships have not been created by any person presently having an interest in the property or by the applicant because the usual triangular shape of the lot and lot width have not been created by the petitioner.

5. That the granting of the variations will not be detrimental to the public welfare or injurious to other property or improvements in the neighborhood in which it is located because a street is located north of the site and the petitioner owns the property across the street to the north of the site which is also used as part of the school campus. A street also separates the site from the single-family residences to the east. In addition, railroad tracks, a parking lot and trees separate and buffer the property from the residential uses to the south and approximately 180-200 feet separate the southern property line from any residential uses. The petitioner provided evidence in the form of cross sections that the impact and visibility of the lights from the residential properties to the south and east will be mitigated and buffered by existing vegetation and distance. In addition, the photometric plans submitted by the petitioner indicate that the proposed foot candle levels will be no greater than .2 at the surrounding residential property lines and will be zero at most of the surrounding residential property lines. A foot candle level of .2 is less than the maximum permitted foot candle level of .3 that would be permitted if the surrounding residential properties were adjacent to the site.

6. The requested variations will not:

   a. Impair an adequate supply of light and air to adjacent property because no new buildings are proposed and the property will continue to be used for recreational purposes accessory to the school;

b. Substantially increase the hazard from fire or other dangers to said property or adjacent property because the principal use of the property will not be changing and the primary use will continue to be for recreational purposes accessory to the school. In addition, although testimony was presented about the warning labels associated with the lights as related to fire, breakage and health issues, the Plan Commission finds that the testimony of the petitioner's lighting expert, who has personal experience working with the proposed lights and who testified that he is not aware of any instances of such related occurrences with the proposed lights, to be compelling.

c. Otherwise impair the public health, safety, comfort, morals or general welfare of the inhabitants of the Village because the principal use of the property will not be changing and the primary use will continue to be for recreational purposes accessory to a public school.

d. Diminish or impair property values within the neighborhood because the petitioner provided expert testimony that the lights will not negatively impact property values in the surrounding area. In addition, a street is located north of the site and the petitioner owns the property across the street to the north of the site which is also used as part of the school campus. A street also separates the site from the single-family residences to the east. In addition, railroad tracks, a parking lot and trees separate the property from the residential uses to the south and approximately 180-200 feet separate the southern property line from any residential uses. Furthermore, the petitioner provided various evidence at the hearings, including cross sections, demonstrating that the impact and visibility of the lights from the residential properties to the south and east will be mitigated and buffered by existing vegetation and distance. In addition, the photometric plans submitted by the petitioner indicates that the proposed foot candle levels will be zero at all surrounding residential property lines.

e. Unduly increase traffic congestion in the public streets and highways because no new access drives are proposed and the principal use of the property will not be changing and the primary use will continue to be for recreational purposes accessory to the school. In addition, testimony was presented that the presence of lights will allow the School District to better space out practices and games which could reduce the amount of pedestrian and vehicular activity in the area at one time and improve traffic circulation.

f. Create a nuisance because the principal use of the property will not be changing and the primary use will continue to be for recreational purposes accessory to the school. In addition, the lights would only be turned on a maximum of 140 nights a year and the petitioner has agreed not to use the lights in the summer. Therefore, the use of the lights will be kept to a minimum. In addition, the photometric plans submitted by the petitioner indicate that the proposed foot candle levels at all surrounding residential property lines will be minimal.

g. Result in an increase in public expenditures because based on the testimony of the Police Chief, no increase in police demand is expected in the area as a result of the requested

variations for the lights and no improvements are proposed that should create an additional need for other Village services.

7. The requested variations are the minimum variations needed to make reasonable use of the property as the applicant has worked with the Village's lighting consultant to reduce the lighting levels while continuing to provide sufficient lighting for play of the fields.

X:\Plandev\PLANNING\DEVELOPMENT PROJECTS\Crescent\Crescent 670, Glenbard West High School\Memorial Field\Phase II - Lights, etc. ZV\Findings of Fact 011012.doc

| QTY | LOCATION | SIZE | GRADE ELEVATION | MOUNTING HEIGHT | LAMP TYPE | QTY/ POLE | THIS GRID | OTHER GRIDS |
|---|---|---|---|---|---|---|---|---|
| 2 | A1-A2 | 60' | - | 60' | 1500W MZ | 3 | 3 | 0 |
| 1 | B1 | 70' | - | 70' | 1500W MZ | 8 | 8 | 0 |
| 1 | B2 | 70' | - | 70' | 1500W MZ | 7 | 7 | 0 |
| 2 | C1-C2 | 70' | - | 70' | 1500W MZ | 7 | 7 | 0 |
| 6 | TOTALS | | | | | 35 | 35 | 0 |

# CRESCENT BOULEVARD SPILL

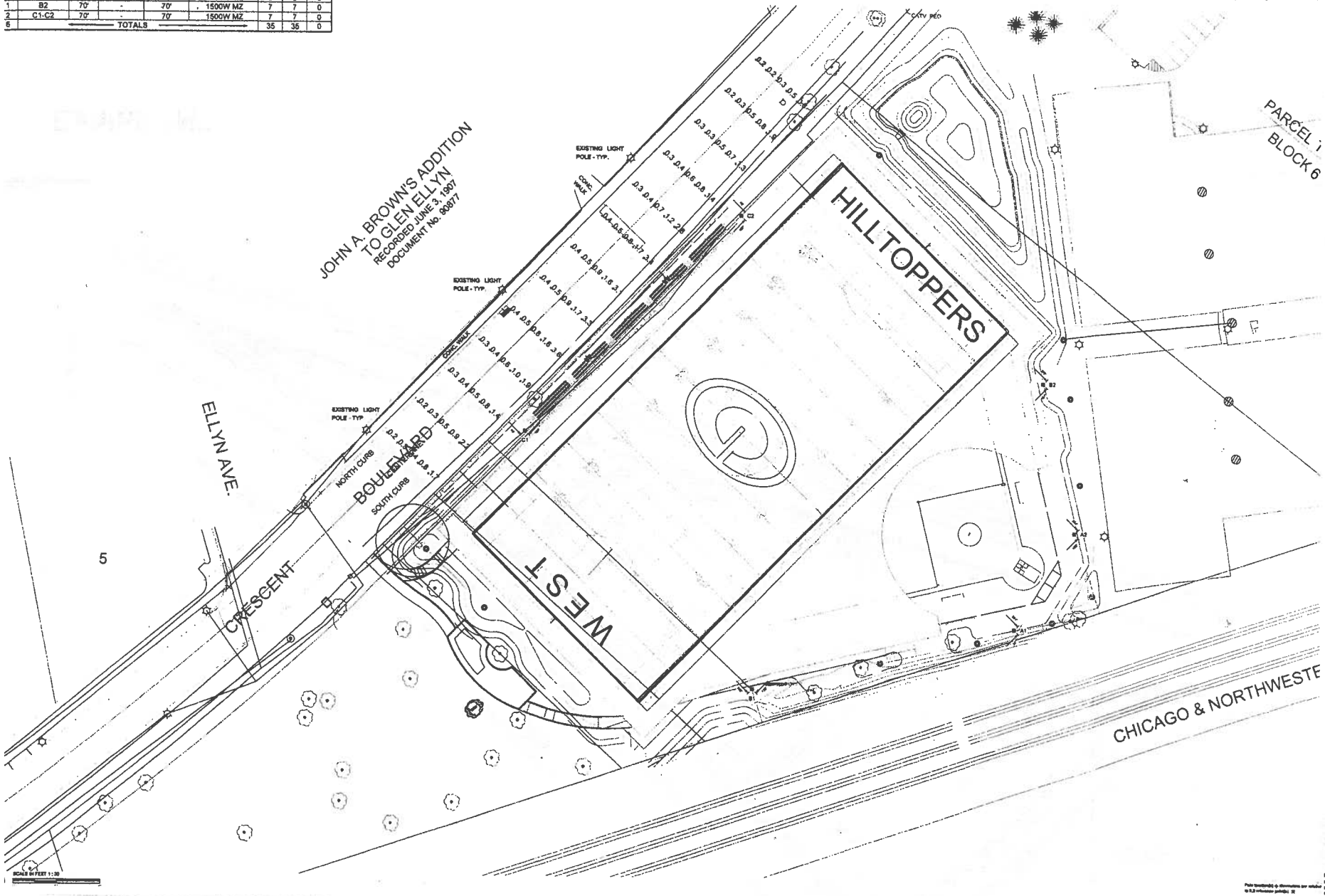


**Exhibit "M"**

musco
GREEN GENERATION LIGHTING

GUARANTEED PERFORMANCE

**ILLUMINATION SUMMARY**

**Crescent Boulevard**
Glenbrook West High School Softball/Soccer
Glen Ellyn,IL

Crescent Boulevard
Size: 400' x 62'
Grid Spacing = 30.0' x 10.0'
Values given to 3.0' above grade

Luminaire Type: Green Generation
Rated Lamp Life: 5,000 hours
Avg Lumens/Lamp: 134,000

CONSTANT ILLUMINATION
HORIZONTAL FOOTCANDLES

Entire Grid

| | |
|---|---|
| No. of Target Points: | 55 |
| Average: | 0.0 |
| Maximum: | 4 |
| Minimum: | 0 |
| Avg/Min: | 7.67 |
| P/F Maximum: | 16.88 |
| UG (Adjacent Pts): | 7.57 |
| CV: | 0.91 |
| Average Lamp Tilt Factor: | 1.000 |
| Number of Luminaires: | 38 |
| Avg KW over 5,000: | 34.21 |
| Max KW: | 38.8 |

Guaranteed Performance: The CONSTANT ILLUMINATION described above is guaranteed for the rated life of the lamp.

Total Measurements: Averages shall be +/-10% in accordance with IESNA RP-8-01 and CISES-G4. Individual measurements may vary from computer predictions.

Electrical System Requirements: Refer to Amperage Draw Chart and/or the "Musco Control System Summary" for electrical rating.

Installation Requirements: Results assume +/- 2% nominal voltage at line side of the ballast and structures located within 3 feet (1m) of design locations.

[redacted]

By: Ryan A. Marsh, LC
File #: 132716R10 Date: 10-Jul-11
Not to be reproduced in whole or part without the written consent of Musco Lighting. ©1991, 2011 Musco Lighting

| LOCATION | SIZE | GRADE ELEVATION | MOUNTING HEIGHT | LAMP TYPE | QTY / POLE | THIS GRID | OTHER GRIDS |
|---|---|---|---|---|---|---|---|
| A1-A2 | 60' | - | 60' | 1500W MZ | 3 | 3 | 0 |
| B1 | 70' | - | 70' | 1500W MZ | 8 | 8 | 0 |
| B2 | 70' | - | 70' | 1500W MZ | 7 | 7 | 0 |
| C1-C2 | 70' | - | 70' | 1500W MZ | 7 | 7 | 0 |
| TOTALS | | | | | 35 | 35 | 0 |

# PROPERTY LINE SPILL

musco
GREEN GENERATION LIGHTING
GUARANTEED PERFORMANCE

**ILLUMINATION SUMMARY**

**Property Line Spill**
Glenbard West High School Softball/Soccer
Glen Ellyn,IL

Property Line Spill
Grid Spacing = 30'0"
Values given at 0.0' above grade

Luminaire Type: Green Generation
Rated Lamp Life: 5,000 hours
Avg Lumens/Lamp: 134,000

CONSTANT ILLUMINATION
HORIZONTAL FOOTCANDLES

Entire Grid
No. of Target Points: 115
Average: 3.181
Maximum: 8.49
Minimum: 0.00

Average Lamp TIP Factor: 1.000
Number of Luminaires: 35
Avg KW over 5,000: 54.74
Max KW: 98.5

Guaranteed Performance: The CONSTANT ILLUMINATION described above is guaranteed for the rated life of the lamp.

Field Measurements: Averages shall be +/-10% in accordance with IESNA RP-8-01 and CIBSE LS4. Individual measurements may vary from computer predictions.

Electrical System Requirements: Refer to Amperage Draw Chart under the "Musco Control System Summary" for electrical sizing.

Installation Requirements: Remain assume +/- 3% nominal voltage at line side of the ballast and structures located within 3 feet (1m) of design locations.

[redacted]

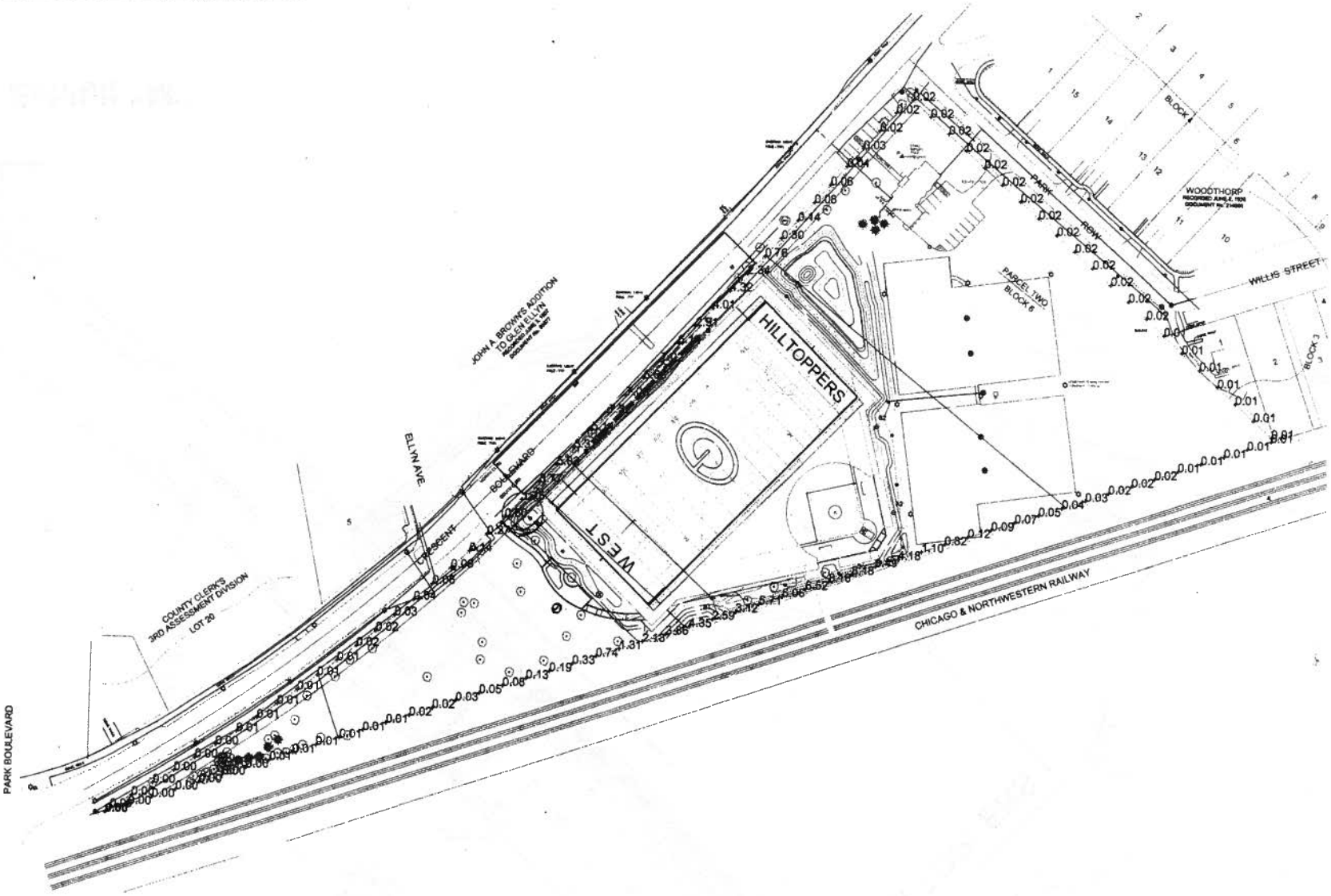


By: Ryan A. Marsh, LC
File #: 1277 16R16 Date: 16-Jul-11

# Exhibit "N"

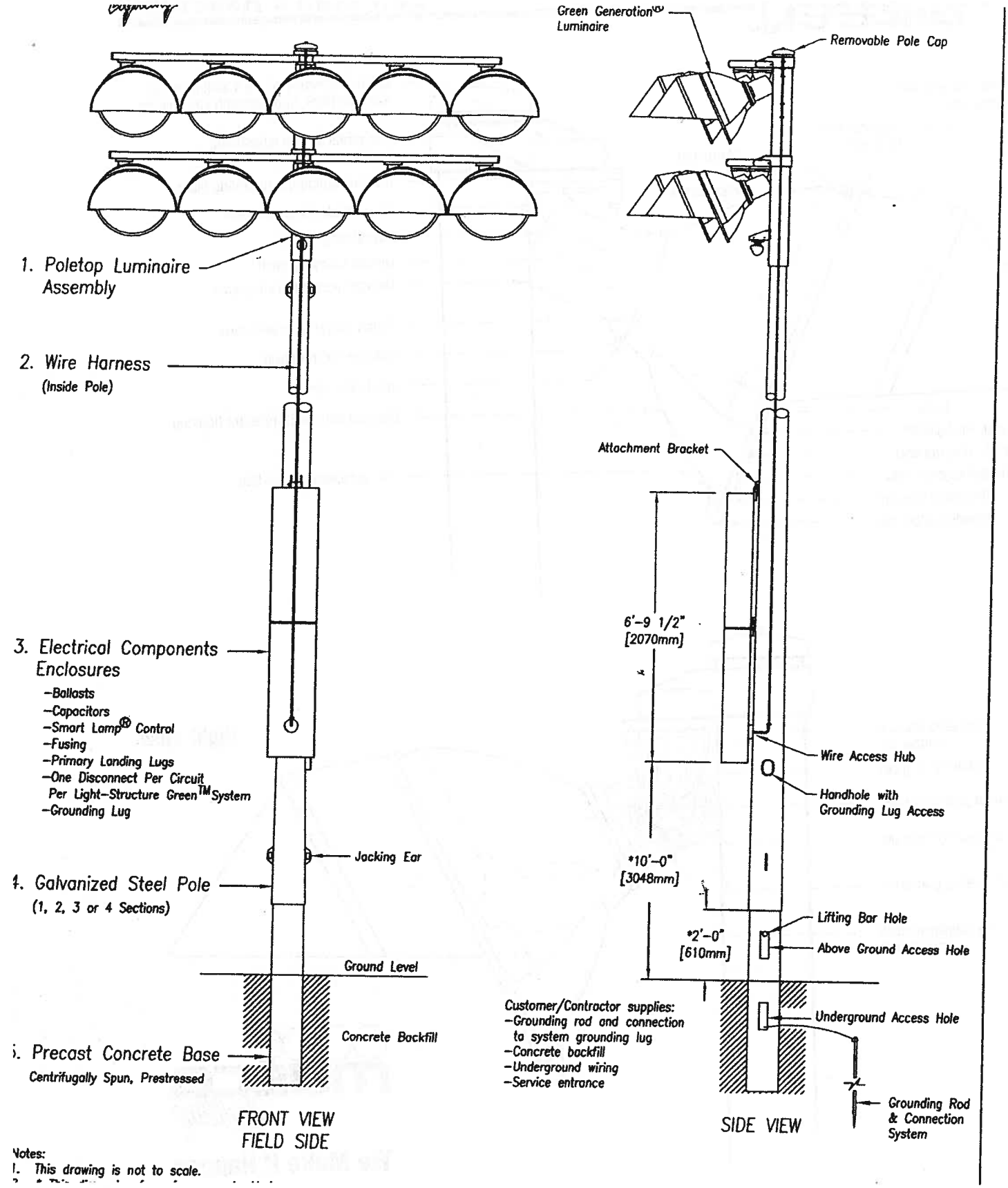


Notes:
1. This drawing is not to scale.

**Exhibit "O" - Page 1 of 2**

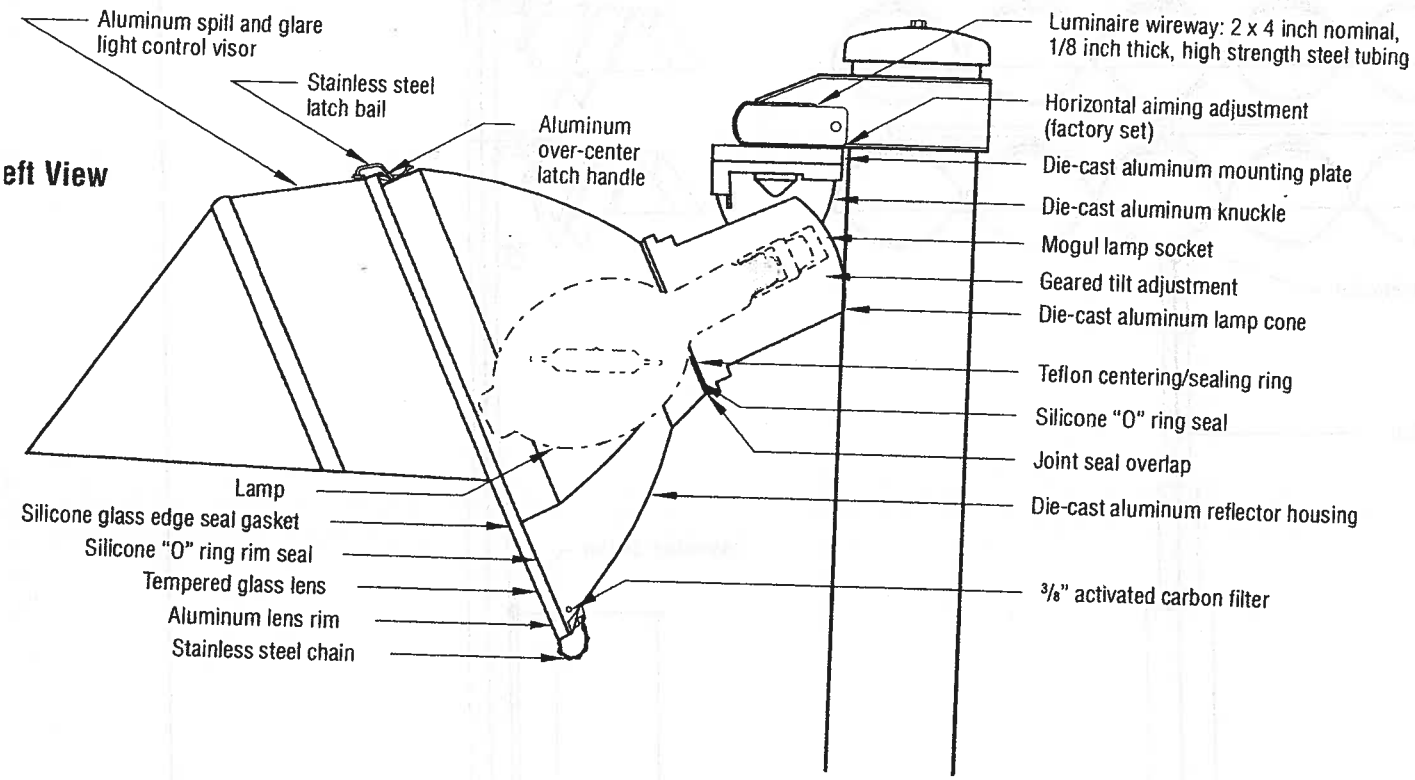


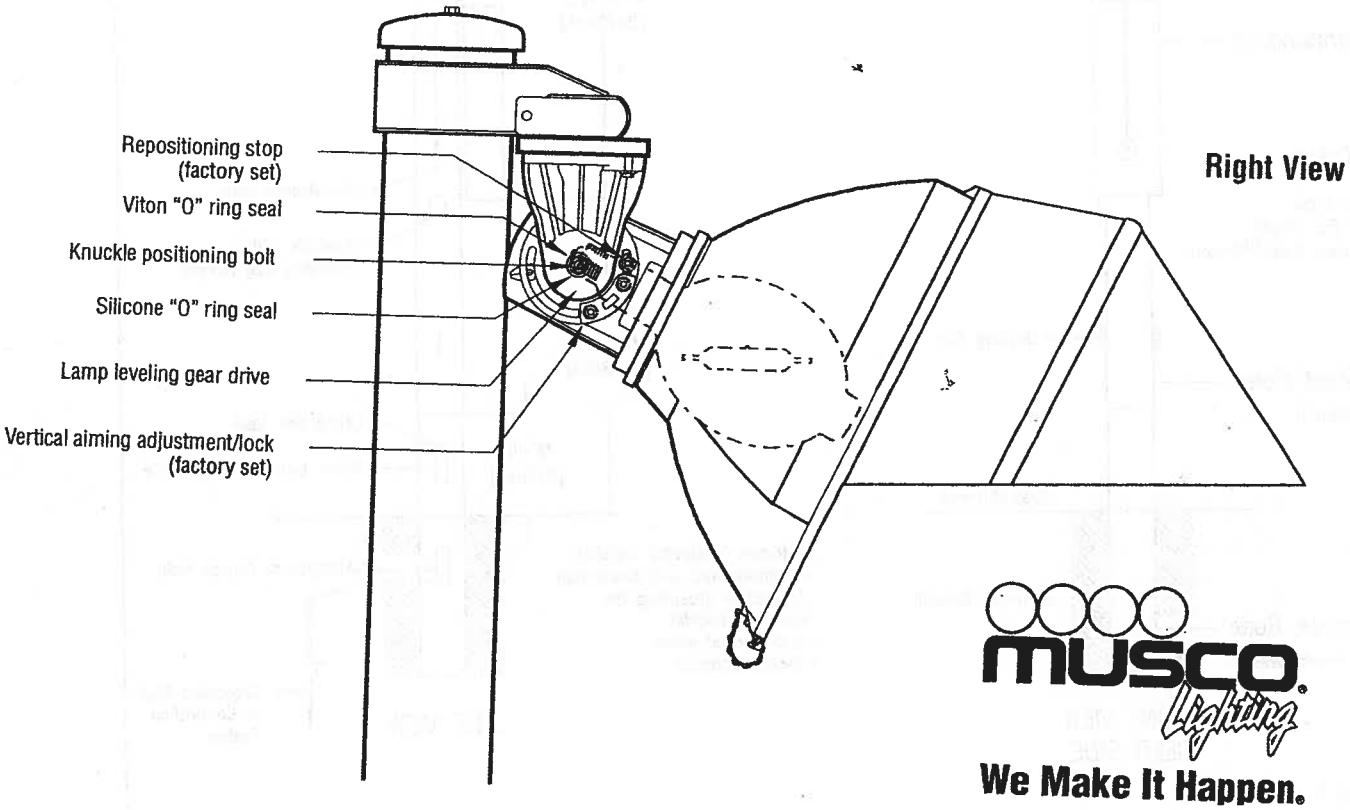


musco Lighting

We Make It Happen.

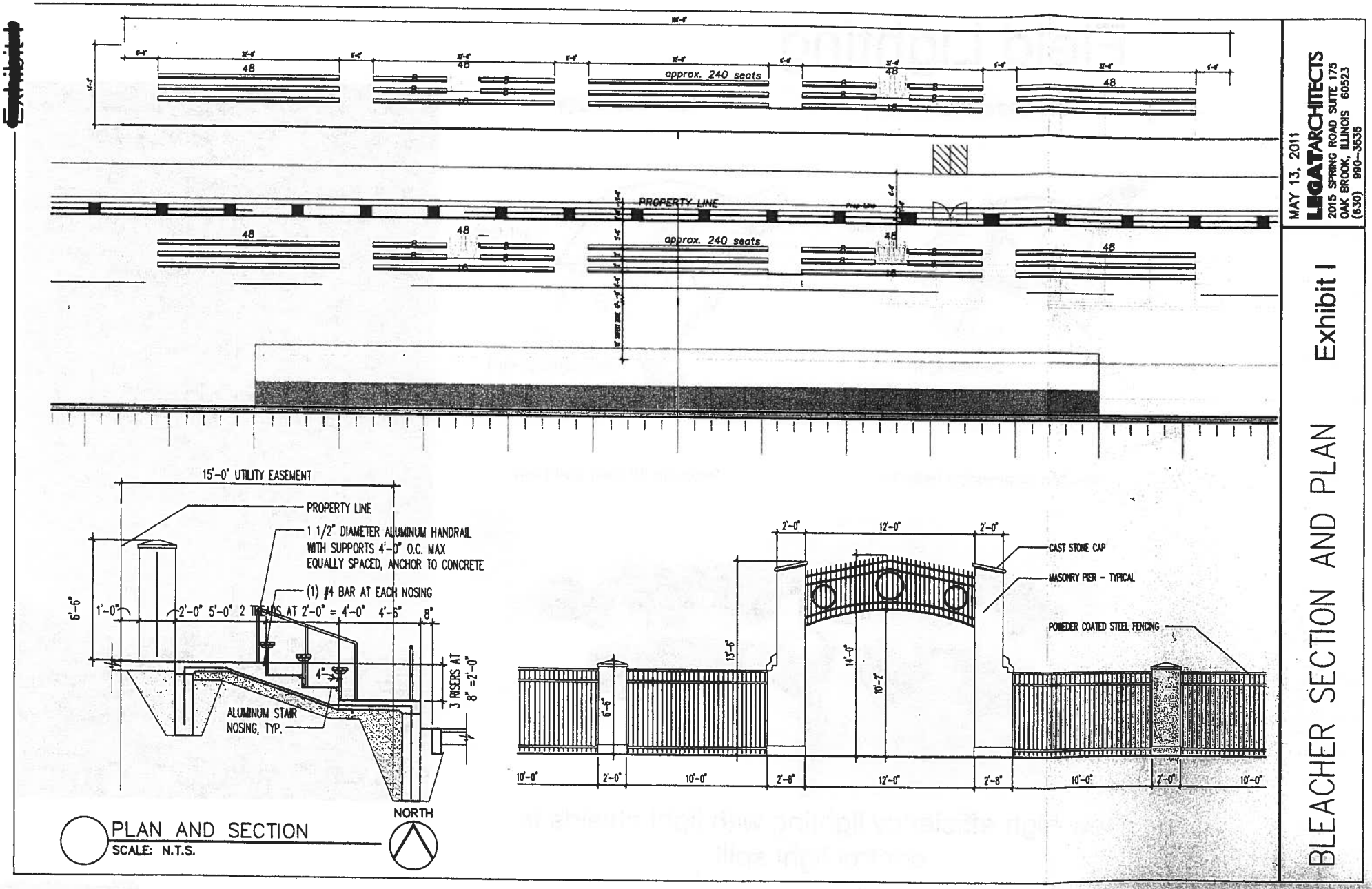
approx. 240 seats
PROPERTY LINE
15'-0" UTILITY EASEMENT
PROPERTY LINE
1 1/2" DIAMETER ALUMINUM HANDRAIL WITH SUPPORTS 4'-0" O.C. MAX EQUALLY SPACED, ANCHOR TO CONCRETE
(1) #4 BAR AT EACH NOSING
ALUMINUM STAIR NOSING, TYP.
3 RISERS AT 8" =2'-0"
CAST STONE CAP
MASONRY PIER - TYPICAL
POWDER COATED STEEL FENCING
NORTH
PLAN AND SECTION
SCALE: N.T.S.
MAY 13, 2011
LIGATARCHITECTS
2015 SPRING ROAD SUITE 175
OAK BROOK, ILLINOIS 60523
(630) 990-3535
BLEACHER SECTION AND PLAN
Exhibit I

**Exhibit "P"**

# Field Lighting

**Old Generation**

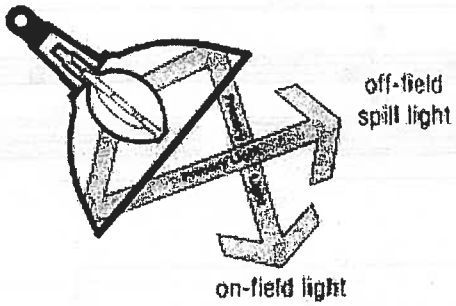


Standard Symmetrical Reflector

**New Technology**

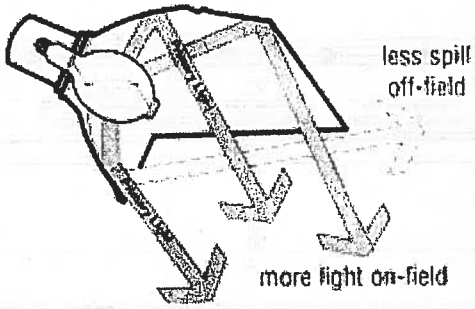


Redirects Off-Field Spill Light

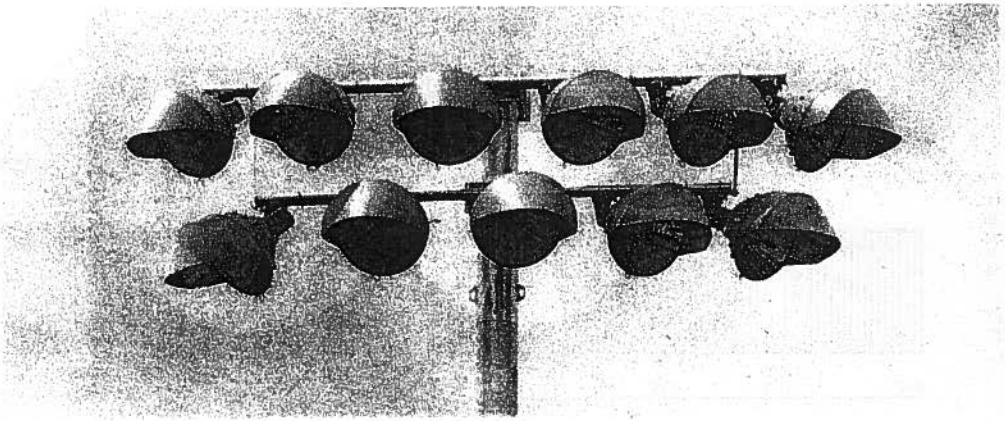

New high efficiency lighting with light shields to control light spill

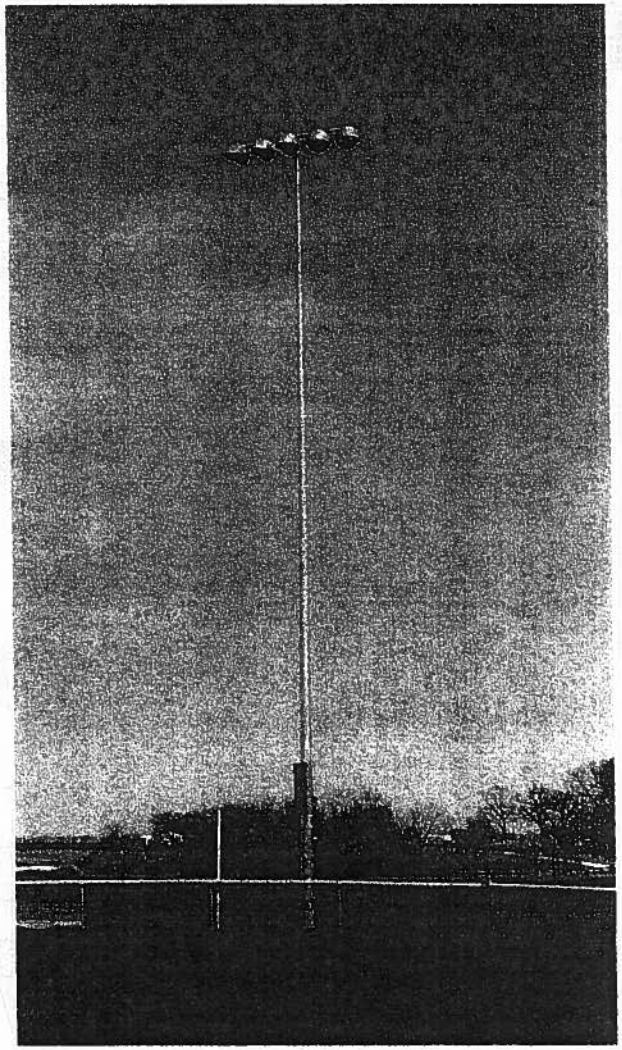

[redacted]

**Exhibit "Q"**

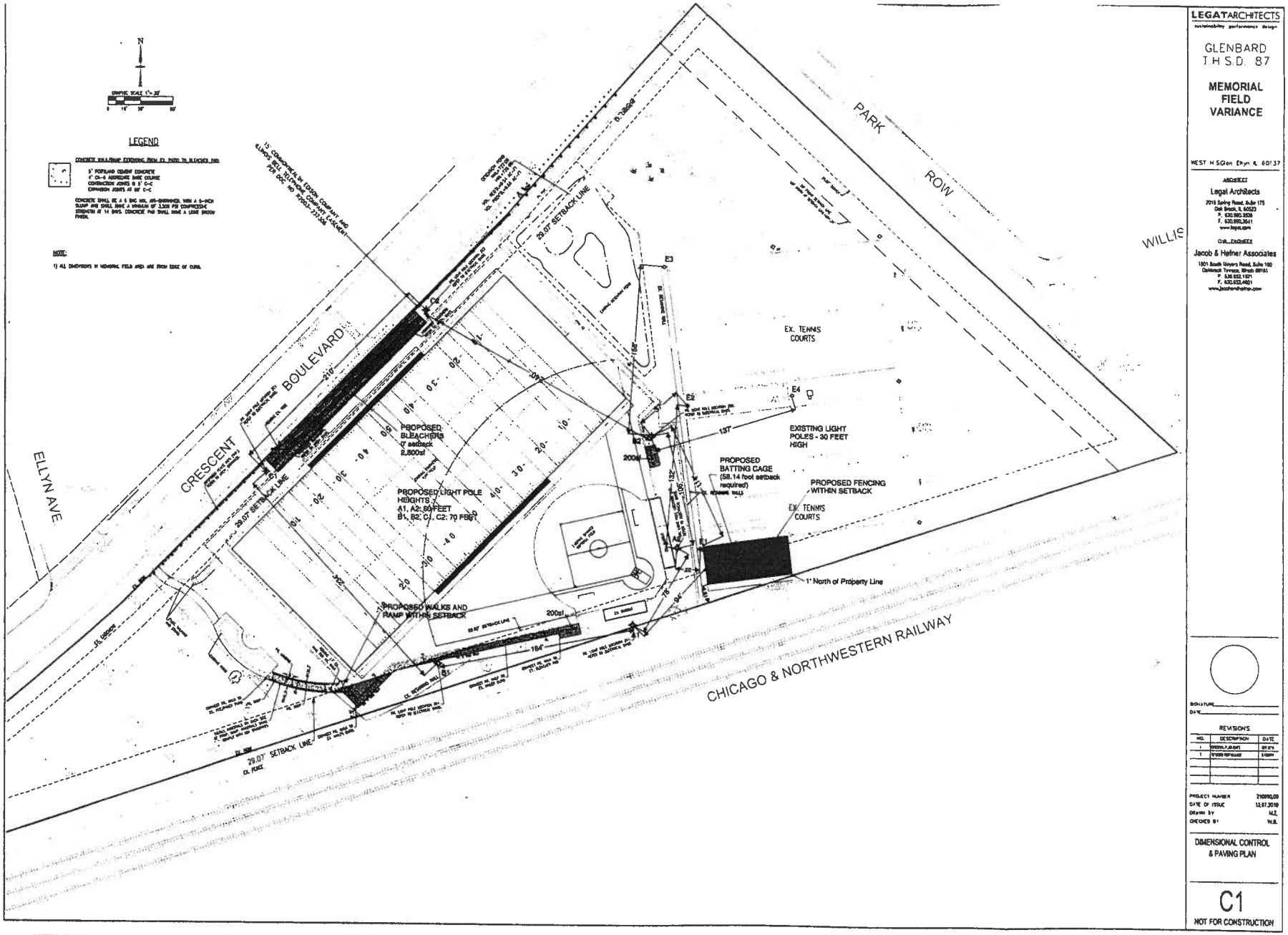
LEGATARCHITECTS
GLENBARD T.H.S.D. 87
MEMORIAL FIELD VARIANCE
WEST HS Glen Ellyn IL 60137
ARCHITECT
Legal Architects
CIVIL ENGINEER
Jacob & Hefner Associates
LEGEND
NOTE:
1) ALL DIMENSIONS IN MEMORIAL FIELD AREA ARE FROM EDGE OF CURB.
N
PARK ROW
WILLIS
CRESCENT BOULEVARD
ELLYN AVE
CHICAGO & NORTHWESTERN RAILWAY
29.07' SETBACK LINE
PROPOSED BLEACHERS 0' setback 2,800sf
PROPOSED LIGHT POLE HEIGHTS A1, A2: 50 FEET B1, B2, C1, C2: 70 FEET
PROPOSED WALKS AND RAMP WITHIN SETBACK
200sf
EX. TENNIS COURTS
EXISTING LIGHT POLES - 30 FEET HIGH
PROPOSED BATTING CAGE (58.14 foot setback required)
PROPOSED FENCING WITHIN SETBACK
1' North of Property Line
REVISIONS
DIMENSIONAL CONTROL & PAVING PLAN
C1
NOT FOR CONSTRUCTION

# Exhibit "R"

# STAFF REPORT

**TO:** Glen Ellyn Plan Commission

**FROM:** Michele Stegall, Village Planner MTS

**DATE:** August 17, 2011

**FOR:** August 25, 2011 Plan Commission Meeting

**SUBJECT:** Memorial Field – Phase II
Zoning Variations

---

**PETITIONER:** The petitioner is Glenbard Township High School District 87, owner of Memorial Park (aka Memorial Field) located at 671 Crescent Boulevard.

**REQUESTS:** Approval of variations from the Glen Ellyn Zoning Code to accommodate proposed improvements to Memorial Field, including new impervious surfaces, bleachers, fencing, an ornamental gate, batting cage and lights. To accommodate the project, the School District is requesting approval of the following zoning variations.

1. A variation from Section 10-5-5(B)4(3) of the Zoning Code to allow an ornamental gate with a height of 14 feet in lieu of the maximum height of 10 feet permitted.

2. A variation from Section 10-5-5(B)4(11) to allow a fence along Crescent Boulevard with a height of 6 feet 6 inches in lieu of the maximum height of 4 feet permitted.

3. A variation from Section 10-5-5(B)4(32) of the Zoning Code to allow a batting cage with a setback of 1 foot from the southern property line in lieu of the minimum setback of 58.14 feet required.

4. A variation from Section 10-5-5(C)1 of the Zoning Code to allow an impervious surface setback of as little as 7.5 feet for a proposed sidewalk along the southern property line and 0 feet to accommodate the base for the bleachers proposed along the northern property line in lieu of the minimum impervious surface setback of 29.07 feet required.

5. A variation from Section 10-5-4(A)2(a) to allow a total of 4,268 square feet of accessory structures on the property in lieu of the maximum of 1,000 square feet of accessory structures permitted *(amendment to previous variation approved by Ordinance 5888).*

6. Variations from Sections 10-5-4(A)4(a) and 10-5-4(A)4(c) of the Zoning Code to allow the northern bleachers to be located 0 feet from the northern property line in lieu of the minimum 18 foot and 29.07 foot accessory structure setbacks required.

7. A variation from Section 10-5-13(M)2(b)1 of the Zoning Code to allow 70 foot tall light poles to be spaced as close as 210 feet apart in lieu of the minimum separation of 280 feet required; to allow 70 foot tall and 60 foot tall light poles to be spaced as close as 106 feet apart in lieu of the minimum separation of 260 feet required; to allow 60 foot tall light poles to be spaced as close as 78 feet apart in the lieu of the minimum separation of 240 feet required; and to allow 60 foot tall and 70 foot tall light poles to be spaced as close as 23 and 37 feet apart respectfully from the existing 30 foot tall tennis court light poles in lieu of the minimum separation of 180 feet and 200 feet required.

8. A variation from Section 10-5-13(M)2(a)2 of the Zoning Code to allow foot-candle levels as high as 8.49 along the southern property line and 7.32 along the northern property line in lieu of the maximum foot-candle level of 3.0 permitted.

9. A variation from Section 10-5-13(M)2(c) to allow the height of the proposed light poles to exceed the height of the approximately 30 foot tall principal building on the site.

**PUBLIC HEARING:**

Notice of the public hearing was published in the August 8, 2011 edition of the Daily Herald. Notices were also mailed to property owners within 500 feet of the site and a placard was placed on the property.

**LOCATION/ ZONING:**

The property is located on the south side of Crescent Boulevard between Park Boulevard and Park Row in the CR Conservation Recreation District. The site is comprised of 8.1 acres. The surrounding zoning and land uses are as follows:

| Land Use | | Zoning |
|---|---|---|
| North: | Glenbard West High School | R2 |
| South: | Railroad, Prairie Path, Residential | CR, R4, R2 |
| East: | Single-Family | R2 |
| West: | Commercial | C5B |

**COMPREHEN-SIVE PLAN:**

The 2001 Comprehensive Plan encourages the Village to cooperate with and support the School Districts and Park District in updating and upgrading their recreational facilities. Copies of various excerpts of the Comprehensive Plan are attached.

**REVIEW PROCESS:**

Earlier this year, the School District held a number of public meetings where the project was discussed. The School District has indicated that they also plan to hold their own separate public hearing on the project in addition to the Village's hearing on the requests.

**HISTORY:**

On September 27, 2010 by the adoption of Ordinance 5888, the Village Board approved zoning variations to accommodate various improvements to Memorial Park including the construction of new dugouts, sidewalks, concrete pads and stairs. At Chairman Fullerton's request a copy of the transcripts from the public hearing for this request are attached. Minutes from the meeting can also be found attached to Ordinance 5888 which is included in this packet.

**PROJECT SUMMARY:**

Last year, School District 87 installed a new turf field at Memorial Park and completed a number of improvements to the site including the installation of new dugouts, sidewalks and a new paver path and patio. The School District is now requesting approval of variations to accommodate the next phase of proposed improvements which includes the installation of new impervious surfaces, bleachers, fencing, an ornamental gate, batting cage and lights. District 87 has requested that any zoning approvals that may be granted for this next phase of work be valid for 5 years. More information about the proposed improvements is below.

1. Sidewalks. A new 5-foot wide ADA accessible walkway is proposed from the paver patio on the west end of the site to the southern softball field bleachers. A portion of the walkway would extend into the required impervious surface setback of 29.07 feet (5% of the lot width). Therefore, the School District is requesting approval of a variation for this item.

2. Fence/Gate. A new 6 foot 6 inch tall fence is proposed along the northern property line adjacent to Crescent Boulevard. A new 14 foot tall ornamental entrance gate is also planned. The School District is requesting approval of variations for the height of both the fence and gate.

3. Bleachers. Permanent bleachers are proposed along the northern property line and near the first and third base lines on the softball field. The northern bleachers have an area of 2800 square feet and are designed to seat 240 people. The softball field bleachers have a total area of 400 square feet (200 square feet each). To accommodate the bleachers, the petitioner is requesting approval of a zoning variation to allow a total area of 4,268 square feet of accessory structures on the property. This would be an amendment to the variation granted by

Ordinance 5888 which permitted 1,067 square feet of accessory structures on the property in lieu of the 1,000 square feet permitted. A variation is also being requested to allow a 0 foot impervious surface setback along the northern property line to accommodate the bleacher pad for the football field.

4. Batting Cage. The plans show the removal of the existing basketball court at the southeast corner of the property and the installation of a new batting cage in its place. The pavement for the existing basketball court extends over the southern property line onto Union Pacific railroad property. As part of the project, the pavement in this area would be scaled back so as to be located entirely on the petitioner's property. The School District is requesting approval to allow a 1 foot setback in this area in lieu of the 58.14 foot setback (10% of the lot width) required.

5. Lights. A total of 6 new light poles are proposed. Poles C1 and C2 would be located along the northern property line and are proposed to be 70 feet tall. Poles B1 and B2 are proposed between the football and softball fields. These poles would also be 70 feet tall. Poles A1 and A2 would be located behind the softball field back stop and would be 60 feet tall.

   In the event that practices are held on both fields at the same time, the photometrics were developed based on all lights being on at once. However, during game times, only the associated field would be lit. More specifically, poles A1, A2, B1, B2 and C2 would light the softball field during game times and poles B1, B2, C1 and C2 would light the football field during game times.

   To accommodate the proposed lights, the petitioner is requesting approval of the variations identified hereinabove for light pole spacing, light pole height and the proposed foot-candle levels along the northern and southern property lines.

   The proposed lighting plans have been reviewed by Village lighting consultant James Darnell with James J. Benes and Associates (see attached memorandum). Mr. Darnell will be present at the Plan Commission hearing on this request. A summary table of the proposed field lighting prepared by Mr. Darnell is also attached.

6. Stormwater. There is sufficient capacity in the existing stormwater facility on the site to provide detention for the additional impervious surfaces that would be added as part of the project.

Below is a brief summary regarding how the School District intends to the use the property if the requested variations are approved and the proposed

improvements are constructed. Additional information about the anticipated use of the property is included in the petitioner's application packet.

1. Field Use/Attendance. The School District plans to use the property for field hockey, soccer, lacrosse, softball and JV football games and practices. The highest attendance is expected to be at JV football games where as many as 150 spectators are expected. Tables indicating the estimated attendance for the various practices and games that would be held on the site are located in the back of the petitioner's application packet.

   In accordance with District 87's intergovernmental agreement with the Glen Ellyn Park District, the Park District would also be permitted to use the property, including use for summer camps. An anticipated schedule of use which includes use by both the School District and Park District is included in the petitioner's application packet. Use of the property by other third party users would require the approval of the School Superintendent. In their application packet, the School District indicates that they are open to limiting the number of additional 3rd party users.

2. Sound System. The School District has indicated that a portable sound system for national anthem and student introductions would be used during games and that there would be no play by play commentary. No permanent sound system is currently planned. According to the information in the petitioner's application packet, third party users would not be permitted to operate sound systems. If the Commission chooses to recommend approval of the requests, this could be incorporated into the motion as a recommended condition of approval. Any noise generated from the sound system would be subject to the performance standards in Section 10-10-13(A) of the Zoning Code.

3. Days and Times of Use. Memorial Field would be programmed for use on Mondays-Saturdays with no activities planned on Sundays. In addition, the School District has indicated that they do not plan to program the property for use after 9:00 pm and that any lights would be turned off by 9:30 pm. If the Commission chooses to recommend approval of the requests, adherence with the dates and times of use proposed by the School District could be incorporated into the motion as a recommended condition of approval.

**PLAN COMMISSION ACTION:**

The Plan Commission should consider the School District's request for approval of the requested zoning variations and make a recommendation to the Village Board for approval, approval with conditions or denial. In

reviewing the requested zoning variations, the Commission should consider the criteria in Sections 10-10-12(C) and (D) of the Zoning Code.

After all testimony has been heard and the Plan Commission has deliberated, staff will work with the Village Attorney to prepare a draft motion for the requests based on the direction received from the Commission.

Planning and Development Director Hulseberg, Police Chief Norton, Village Attorney Tappendorf, Village Lighting Consultant Darnell and I will be present at the public hearings for this application.

**ATTACHMENTS:**

- Aerial Photo
- Location Map for Public Hearing Notice
- Public Hearing Notice
- Mailing Labels for Public Hearing Notice
- Sections 10-10-12(C) and (D) of the Zoning Code
- Excerpts from Comprehensive Plan
- Memorandum from Attorney Tappendorf dated August 16, 2011
- Memorandum from James Darnell dated July 25, 2011
- Summary Table of Proposed Lighting Prepared by James J. Benes & Associates
- Historic Preservation Commission Resolution In Opposition to the Requests
- Correspondence in Support of the Request
- Correspondence in Opposition to the Request
- General Correspondence
- Ordinance 5888
- Transcripts from September 9, 2010 Plan Commission meeting
- Petitioner's Application Packet dated August 9, 2011

cc: Staci Hulseberg, Planning and Development Director
Phil Norton, Police Chief
Julie Tappendorf, Village Attorney
James Darnell, Village Lighting Consultant
Michael Meisen, School District 87 Superintendent
Chris McClain, School District 87 Assistant Superintendent of Business Services
Paul Pessetti, Legat Architects
Brian Crowley, Petitioner's Attorney

X:\Plandev\PLANNING\DEVELOPMENT PROJECTS\Crescent\Crescent 670, Glenbard West High School\Memorial Field\Phase II - Lights, etc. ZV\PC Staff Report 081911.doc

# Memorial Field

Prepared by: Planning and Development
Date: September 1, 2010
2009 Aerial Photo

0 250 500 Feet

N

# Memorial Field
# 671 Crescent Boulevard

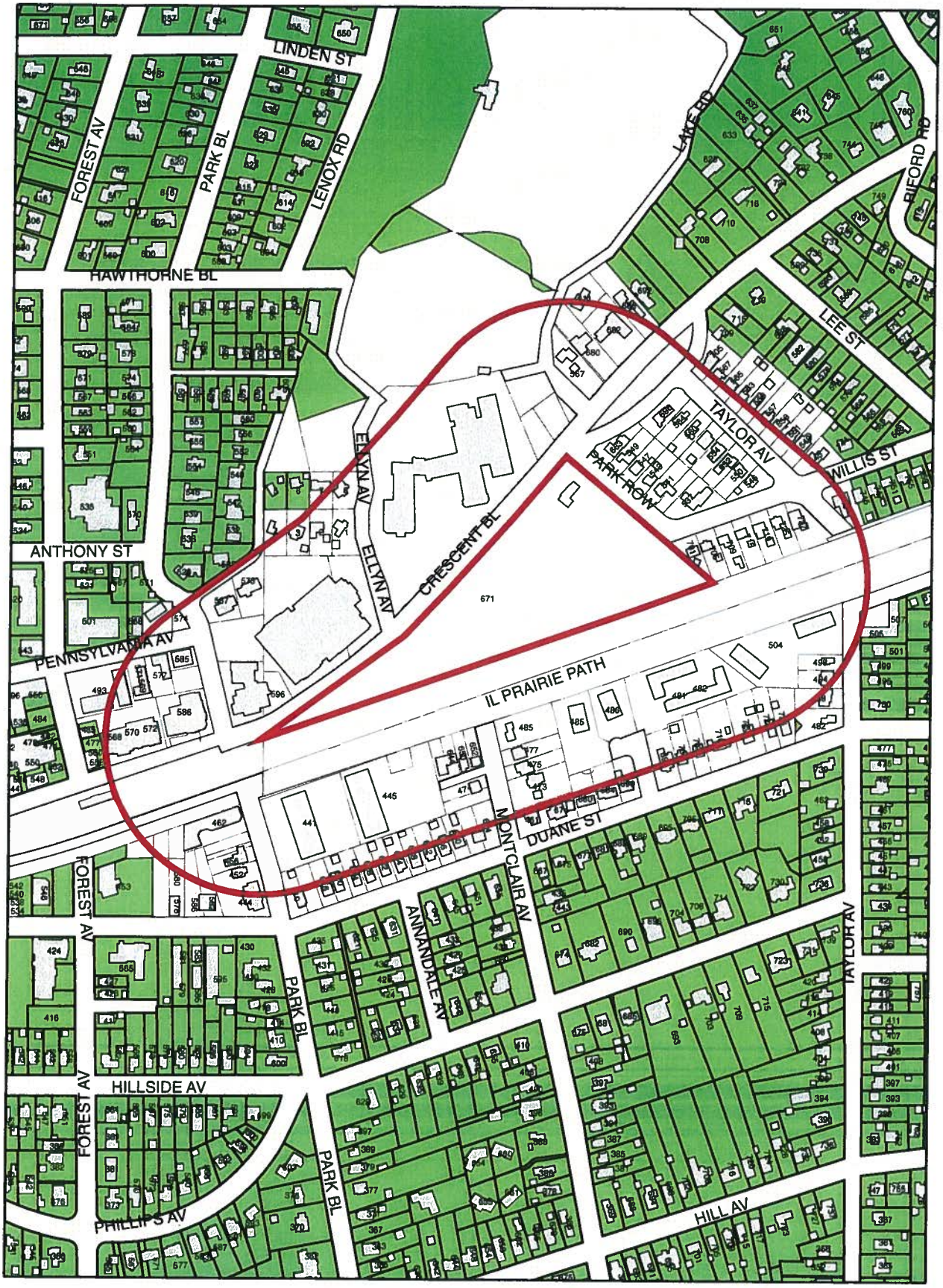


Prepared By: Planning and Development
Date: August 5, 2011

0 250 500 1,000 Feet

N

**NOTICE OF PUBLIC HEARING**
**BEFORE THE GLEN ELLYN PLAN COMMISSION**

Glenbard Township High School District 87, owner of property located at 671 Crescent Boulevard, commonly known as Memorial Field, is requesting approval of variations from the Glen Ellyn Zoning Code to accommodate proposed improvements to the property including new impervious surfaces, bleachers, fencing, an ornamental gate, batting cage and lights. The subject property is located on the south side of Crescent Boulevard between Park Boulevard and Park Row and is zoned CR Conservation Recreation district.

Before the Glen Ellyn Village Board can consider the requests, the Plan Commission must conduct a public hearing. The Plan Commission will conduct a public hearing to consider the requested zoning variations on **Thursday, August 25, 2011 at 7:30 p.m.** in a meeting room on the third floor of the Glen Ellyn Civic Center, 535 Duane Street, Glen Ellyn, Illinois. At the public hearing, the Plan Commission will consider the petitioner's request for approval of the following variations from the Glen Ellyn Zoning Code.

1. A variation from Section 10-5-5(B)4(3) of the Zoning Code to allow an ornamental gate with a height of 14 feet in lieu of the maximum height of 10 feet permitted.

2. A variation from Section 10-5-5(B)4(11) to allow a fence along Crescent Boulevard with a height of 6 feet 6 inches in lieu of the maximum height of 4 feet permitted.

3. A variation from Section 10-5-5(B)4(32) of the Zoning Code to allow a batting cage with a setback of 1 foot from the southern property line in lieu of the minimum setback of 58.14 feet required.

4. A variation from Section 10-5-5(C)1 of the Zoning Code to allow an impervious surface setback of as little as 7.5 feet for a proposed sidewalk along the southern property line and 0 feet to accommodate the base for the bleachers proposed along the northern property line in lieu of the minimum impervious surface setback of 29.07 feet required.

5. A variation from Section 10-5-4(A)2(a) to allow a total of 4,268 square feet of accessory structures on the property in lieu of the maximum of 1,000 square feet of accessory structures permitted. *(amendment to previous variation approved by Ordinance 5888 which permitted 1,068 square feet of accessory structures on the property and being requested to accommodate proposed bleachers)*

6. Variations from Sections 10-5-4(A)4(a) and 10-5-4(A)4(c) of the Zoning Code to allow the northern bleachers to be located 0 feet from the northern property line in lieu of the minimum 18 foot and 29.07 foot accessory structure setbacks required.

7. A variation from Section 10-5-13(M)2(b)1 of the Zoning Code to allow 70 foot tall light poles to be spaced as close as 210 feet apart in lieu of the minimum separation of 280 feet required; to allow 70 foot tall and 60 foot tall light poles to be spaced as close as 106 feet apart in lieu of the minimum separation of 260 feet required; to allow 60 foot tall light poles to be spaced as close as 78 feet apart in the lieu of the minimum separation of 240 feet

required; and to allow 60 foot tall and 70 foot tall light poles to be spaced as close as 23 and 37 feet apart respectfully from the existing 30 foot tall tennis court light poles in lieu of the minimum separation of 180 feet and 200 feet required.

8. A variation from Section 10-5-13(M)2(a)2 of the Zoning Code to allow foot-candle levels as high as 8.49 along the southern property line and 7.32 along the northern property line in lieu of the maximum foot-candle level of 3.0 permitted.

9. A variation from Section 10-5-13(M)2(c) to allow the height of the proposed light poles to exceed the height of the principal building on the site.

10. Any other zoning relief necessary to construct the project as depicted on the plans presented and available for public review or necessary to accommodate changes requested by the Plan Commission or Village Board.

The subject property is legally described as follows:

PARCEL ONE:
LOT 17 IN COUNTY CLERK'S THIRD ASSESSMENT DIVISION, IN SECTION 11, TOWNSHIP 39 NORTH, RANGE 10, EAST OF THE THIRD PRINCIPAL MERIDIAN, ACCORDING TO THE PLAT THEREOF RECORDED JULY 3, 1906 AS DOCUMENT 88053, IN DUPAGE COUNTY, ILLINOIS.

PARCEL TWO:
ALL OF BLOCK 6 IN WOODTHORP, BEING A SUBDIVISION IN THE SOUTHEAST QUARTER OF SECTION 11, TOWNSHIP 39 NORTH, RANGE 10, EAST OF THE THIRD PRINCIPAL MERIDIAN, ACCORDING TO THE PLAT THEREOF RECORDED JUNE 2, 1926 AS DOCUMENT NUMBER 214660, IN DUPAGE COUNTY, ILLINOIS.

P.I.N.: 05-11-410-014

All persons in the Village of Glen Ellyn who are interested are invited to attend the public hearing to listen and be heard. Plans related to the proposed project are available for public review in the Planning and Development Department of the Civic Center, 535 Duane Street, Glen Ellyn, Illinois. Questions related to the requests should be directed to Michele Stegall, Village Planner, 630-547-5249.

Individuals with disabilities who plan to attend the hearing and who require certain accommodations in order to allow them to observe and participate, or who have questions regarding the accessibility of the meeting or facilities, are requested to contact the Village 24 hours in advance of the meeting.

CURRENT OWNER
571 PENNSYLVANIA AVENUE
GLEN ELLYN, IL 60137

CURRENT OWNER
577 PENNSYLVANIA AVENUE
GLEN ELLYN, IL 60137

CURRENT OWNER
585 PENNSYLVANIA AVENUE
GLEN ELLYN, IL 60137

CURRENT OWNER
567 DEERPATH ROAD
GLEN ELLYN, IL 60137

CURRENT OWNER
568 CRESCENT BOULEVARD
GLEN ELLYN, IL 60137

CURRENT OWNER
572 CRESCENT BOULEVARD
GLEN ELLYN, IL 60137

CURRENT OWNER
680 CRESCENT BOULEVARD
GLEN ELLYN, IL 60137

CURRENT OWNER
559 TAYLOR AVENUE
GLEN ELLYN, IL 60137

CURRENT OWNER
715 WILLIS STREET
GLEN ELLYN, IL 60137

CURRENT OWNER
716 DUANE STREET
GLEN ELLYN, IL 60137

CURRENT OWNER
482 DUANE TERRACE
GLEN ELLYN, IL 60137

CURRENT OWNER
505 WALNUT STREET
GLEN ELLYN, IL 60137

CURRENT OWNER
507 WALNUT STREET
GLEN ELLYN, IL 60137

CURRENT OWNER
644 SPAULDING COURT
GLEN ELLYN, IL 60137

CURRENT OWNER
650 SPAULDING COURT
GLEN ELLYN, IL 60137

CURRENT OWNER
652 SPAULDING COURT
GLEN ELLYN, IL 60137

CURRENT OWNER
462 PARK BOULEVARD
GLEN ELLYN, IL 60137

CURRENT OWNER
452 PARK BOULEVARD
GLEN ELLYN, IL 60137

CURRENT OWNER
582 DUANE STREET
GLEN ELLYN, IL 60137

CURRENT OWNER
586 DUANE STREET
GLEN ELLYN, IL 60137

CURRENT OWNER
578 DUANE STREET
GLEN ELLYN, IL 60137

CURRENT OWNER
580 DUANE STREET
GLEN ELLYN, IL 60137

CURRENT OWNER
444 PARK BOULEVARD
GLEN ELLYN, IL 60137

CURRENT OWNER
569 PENNSYLVANIA AVENUE
GLEN ELLYN, IL 60137

CURRENT OWNER
498 TAYLOR AVENUE
GLEN ELLYN, IL 60137

DUPAGE COUNTY HWY DEPT
OR CURRENT OWNER
130 N COUNTY FARM RD
WHEATON, IL 60187

FORMAN, KENNETH C
OR CURRENT OWNER
445 PARK BLVD #1-L
GLEN ELLYN, IL 60137

RAUSCH, RICHARD
OR CURRENT OWNER
680 DUANE ST
GLEN ELLYN, IL 60137

MURPHY, SHAWN P
OR CURRENT OWNER
567 LAKE RD
GLEN ELLYN, IL 60137

OZOG, MARY F
OR CURRENT OWNER
485 MONTCLAIR AVE
GLEN ELLYN, IL 60137

582 CRESCENT LLC
OR CURRENT OWNER
582 CRESCENT BLVD
GLEN ELLYN, IL 60137

ZIGAITIS, RIMA
OR CURRENT OWNER
441 PARK BLVD #1L
GLEN ELLYN, IL 60137

US BANK CORP
OR CURRENT OWNER
2800 E LAKE ST
MINNEAPOLIS, MN 55406

NELSON, DARYL GUNNAR
OR CURRENT OWNER
574 PENNSYLVANIA AVE
GLEN ELLYN, IL 60137

VILLAGE OF GLEN ELLYN
OR CURRENT OWNER
535 DUANE ST
GLEN ELLYN, IL 60137

ROSE, JAMES & KELLI A
OR CURRENT OWNER
628 DUANE ST
GLEN ELLYN, IL 60137

RILEY, BRIAN & CHRISTINA
OR CURRENT OWNER
638 DUANE ST
GLEN ELLYN, IL 60137

MASON, DANIEL F
OR CURRENT OWNER
504 TAYLOR AVE #A
GLEN ELLYN, IL 60137

FEINBERG, STEVEN & MEGAN
OR CURRENT OWNER
545 TAYLOR AVE
GLEN ELLYN, IL 60137

SCHOOL DISTRICT NO 87
OR CURRENT OWNER
596 CRESCENT BLVD
GLEN ELLYN, IL 60137

BLOMQUIST, BETTY J
OR CURRENT OWNER
741 WILLIS ST
GLEN ELLYN, IL 60137

DANAHER, DENNIS & MELISSA
OR CURRENT OWNER
564 TAYLOR AVE
GLEN ELLYN, IL 60137

PARKE, WILLIAM R & R C
OR CURRENT OWNER
552 TAYLOR AVE
GLEN ELLYN, IL 60137

RAWSON BRADY, CATHERINE
OR CURRENT OWNER
567 DEERPATH RD
GLEN ELLYN, IL 60137

BLOOMSTRAND, GRACE M
OR CURRENT OWNER
586 CRESCENT BLVD #201
GLEN ELLYN, IL 60137

VILLAGE OF GLEN ELLYN
OR CURRENT OWNER
535 DUANE ST
GLEN ELLYN, IL 60137

BAILEY, JENIFER & WILLIAM
OR CURRENT OWNER
481 DUANE TERR #1A
GLEN ELLYN, IL 60137

HIGH SCHOOL DISTR #87
OR CURRENT OWNER
800 ROOSEVELT RD #100
GLEN ELLYN, IL 60137

CURZIO, DANIEL
OR CURRENT OWNER
554 TAYLOR AVE
GLEN ELLYN, IL 60137

SIMS, RICHARD & JUDITH
OR CURRENT OWNER
663 CRESCENT CT
GLEN ELLYN, IL 60137

NIERHOFF, ANDREA C
OR CURRENT OWNER
570 CRESCENT BLVD #101
GLEN ELLYN, IL 60137

FREILER, CHRISTOPHER W
OR CURRENT OWNER
690 DUANE ST
GLEN ELLYN, IL 60137

DUPAGE COUNTY HWY DEPT
OR CURRENT OWNER
130 N COUNTY FARM RD
WHEATON, IL 60187

OLSON, LOREN M
OR CURRENT OWNER
2 ELLYN CT
GLEN ELLYN, IL 60137

GELFER, GEORGE
OR CURRENT OWNER
494 TAYLOR AVE
GLEN ELLYN, IL 60137

SCHOOL DISTRICT NO 87
OR CURRENT OWNER
596 CRESCENT BLVD
GLEN ELLYN, IL 60137

GLEN CROSSING
OR CURRENT OWNER
1263 S HIGHLAND AVE
LOMBARD, IL 60148-4527

GLEN CROSSING
OR CURRENT OWNER
1263 S HIGHLAND AVE
LOMBARD, IL 60148

GLEN ELLYN MTG CORP
OR CURRENT OWNER
497 MAIN ST
GLEN ELLYN, IL 60137

MURPHY DDS, JOHN E
OR CURRENT OWNER
456 PARK AVE
GLEN ELLYN, IL 60137

CHERNESKY, ROBERT
OR CURRENT OWNER
632 DUANE ST
GLEN ELLYN, IL 60137

SALAFATINOS, CHRIST
OR CURRENT OWNER
684 DUANE ST
GLEN ELLYN, IL 60137

RUOTI, JAMES S & JULIE L
OR CURRENT OWNER
558 TAYLOR AVE
GLEN ELLYN, IL 60137

KAHLER, JOHN A
OR CURRENT OWNER
560 TAYLOR AVE
GLEN ELLYN, IL 60137

NELSON, DARYL GUNNAR
OR CURRENT OWNER
574 PENNSYLVANIA AVE
GLEN ELLYN, IL 60137

SCHOOL DISTRICT NO 87
OR CURRENT OWNER
596 CRESCENT BLVD
GLEN ELLYN, IL 60137

SALAFATINOS, CHRIST
OR CURRENT OWNER
684 DUANE ST
GLEN ELLYN, IL 60137

SLATTERY, STEPHEN 21369-1
OR CURRENT OWNER
498 TAYLOR AVE
GLEN ELLYN, IL 60137

SCHOOL DISTRICT NO 87
OR CURRENT OWNER
596 CRESCENT BLVD
GLEN ELLYN, IL 60137

HIGH SCHOOL DISTR #87
OR CURRENT OWNER
800 ROOSEVELT RD #100
GLEN ELLYN, IL 60137

PYDO, DONALD & CANDACE
OR CURRENT OWNER
682 CRESCENT BLVD
GLEN ELLYN, IL 60137

MONTANA, PATRICK J & C A
OR CURRENT OWNER
550 TAYLOR AVE
GLEN ELLYN, IL 60137

PENNSYLVANIA BLDG PRTNR
OR CURRENT OWNER
497 MAIN ST
GLEN ELLYN, IL 60137

TYLER, ROBERT J & K B
OR CURRENT OWNER
642 DUANE ST
GLEN ELLYN, IL 60137

MANGANELLO, ANTHONY V
OR CURRENT OWNER
482 TAYLOR
GLEN ELLYN, IL 60137

PAUK, LARONNA
OR CURRENT OWNER
724 DUANE ST
GLEN ELLYN, IL 60137

NULL, SCOTT ROBERT
OR CURRENT OWNER
488 TAYLOR AVE
GLEN ELLYN, IL 60137

WEST, JAMES J & MARY C
OR CURRENT OWNER
634 DUANE ST
GLEN ELLYN, IL 60137

MC NEARY, KEVIN & J
OR CURRENT OWNER
654 DUANE ST
GLEN ELLYN, IL 60137

SCHOOL DISTRICT NO 87
OR CURRENT OWNER
596 CRESCENT BLVD
GLEN ELLYN, IL 60137

HYMAN, JAMES A & PATRICIA
OR CURRENT OWNER
650 DUANE ST
GLEN ELLYN, IL 60137

PECOVER, WILLIAM & C A
OR CURRENT OWNER
537 PARK ROW
GLEN ELLYN, IL 60137

HAND, JAMES & STEPHANIE
OR CURRENT OWNER
546 TAYLOR AVE
GLEN ELLYN, IL 60137

DVORAK PARTNERS LP
OR CURRENT OWNER
406 N MAIN ST
LOMBARD, IL 60148

SCHOOL DISTRICT NO 87
OR CURRENT OWNER
596 CRESCENT BLVD
GLEN ELLYN, IL 60137

MURPHY DDS, JOHN E
OR CURRENT OWNER
456 PARK AVE
GLEN ELLYN, IL 60137

SCHOOL DISTRICT NO 87
OR CURRENT OWNER
596 CRESCENT BLVD
GLEN ELLYN, IL 60137

AIM PENNSYLVANIA LLC
OR CURRENT OWNER
600 ENTERPRISE DR #120
OAK BROOK, IL 60523

ACKERMANN, DOUGLASS &DODE
OR CURRENT OWNER
575 DEERPATH RD
GLEN ELLYN, IL 60137

JONES, RICHARD & L RUSSO
OR CURRENT OWNER
551 ROOSEVELT RD #325
GLEN ELLYN, IL 60137

GLEN ELLYN PARK DIST
OR CURRENT OWNER
185 SPRING AVE
GLEN ELLYN, IL 60137

MEYERS, THOMAS & GINA R
OR CURRENT OWNER
477 MONTCLAIR AVE
GLEN ELLYN, IL 60137

SIEBERT, JAMES & ELLYN
OR CURRENT OWNER
547 PARK ROW
GLEN ELLYN, IL 60137

LOSTER, THEODORE &BARBARA
OR CURRENT OWNER
709 WILLIS ST
GLEN ELLYN, IL 60137

OR CURRENT OWNER

SCHOOL DISTRICT NO 87
OR CURRENT OWNER
596 CRESCENT BLVD
GLEN ELLYN, IL 60137

SNYDER, SHARON M
OR CURRENT OWNER
702 DUANE ST
GLEN ELLYN, IL 60137

ROSS, DONALD S
OR CURRENT OWNER
549 PARKROW
GLEN ELLYN, IL 60137

FASULES, LENORE F
OR CURRENT OWNER
565 TAYLOR AVE
GLEN ELLYN, IL 60137

GARY, DAVE
OR CURRENT OWNER
2235 LOTUS CT
NAPERVILLE, IL 60565

MURPHY, SHAWN P
OR CURRENT OWNER
567 LAKE RD
GLEN ELLYN, IL 60137

OR CURRENT OWNER

LEVY, ALBERT M
OR CURRENT OWNER
650 SPALDING
GLEN ELLYN, IL 60137

MC NEARY, KEVIN & J
OR CURRENT OWNER
654 DUANE ST
GLEN ELLYN, IL 60137

ZEIDMAN, MICHAEL & PAMELA
OR CURRENT OWNER
475 MONTCLAIR AVE
GLEN ELLYN, IL 60137

SCAVONE, HELEN F
OR CURRENT OWNER
559 TAYLOR AVE
GLEN ELLYN, IL 60137

SCHWEIG, DIANE J
OR CURRENT OWNER
726 DUANE ST
GLEN ELLYN, IL 60137

LUND, DIANA E
OR CURRENT OWNER
474 MONTCLAIR AVE
GLEN ELLYN, IL 60137

MOSHER, TODD & KAREN
OR CURRENT OWNER
473 MONTCLAIR
GLEN ELLYN, IL 60137

SCHOOL DISTRICT NO 87
OR CURRENT OWNER
596 CRESCENT BLVD
GLEN ELLYN, IL 60137

METZ, JANEL
OR CURRENT OWNER
698 DUANE ST
GLEN ELLYN, IL 60137

PETERS, SUSAN A
OR CURRENT OWNER
541 PARK ROW
GLEN ELLYN, IL 60137

DELA CRUZ, JONATHAN & S
OR CURRENT OWNER
701 E WILLIS AVE
GLEN ELLYN, IL 60137

JOURDAN, ROBERT
OR CURRENT OWNER
22W301 AHLSTRAND RD
GLEN ELLYN, IL 60137-1352

VILLAGE OF GLEN ELLYN
OR CURRENT OWNER
535 DUANE ST
GLEN ELLYN, IL 60137

GOODMAN, MARILYN W
OR CURRENT OWNER
2222 35TH ST
OAK BROOK, IL 60523

OR CURRENT OWNER

ARMSTRONG, J & M WALTERS
OR CURRENT OWNER
725 WILLIS ST
GLEN ELLYN, IL 60137

SAYERS JR, ELMER E
OR CURRENT OWNER
610 DUANE ST
GLEN ELLYN, IL 60137

STEIGLEDER, KARL & SUSAN
OR CURRENT OWNER
705 CRESCENT CT
GLEN ELLYN, IL 60137

RAUSCH, RICHARD
OR CURRENT OWNER
680 DUANE ST
GLEN ELLYN, IL 60137

GLEN ELLYN PARK DIST
OR CURRENT OWNER
185 SPRING AVE
GLEN ELLYN, IL 60137

SCHOOL DISTR NO 87
OR CURRENT OWNER
596 CRESCENT BLVD
GLEN ELLYN, IL 60137

STARUCK, JAMES E
OR CURRENT OWNER
549 TAYLOR
GLEN ELLYN, IL 60137

BRANDT, ROBERT & KRISTIN
OR CURRENT OWNER
563 TAYLOR AVE
GLEN ELLYN, IL 60137

GRACE LUTHERAN CHURCH
OR CURRENT OWNER
493 FOREST AVE
GLEN ELLYN, IL 60137

MAMMOSER JR, JOHN H
OR CURRENT OWNER
646 DUANE ST
GLEN ELLYN, IL 60137

FRIES, JAMES & DIANA
OR CURRENT OWNER
644 SPALDING AVE
GLEN ELLYN, IL 60137

BRUNELL, MICHAL
OR CURRENT OWNER
696 CRESCENT CT
GLEN ELLYN, IL 60137

SALVATORI, MICHAEL
OR CURRENT OWNER
4 ELLYN CT
GLEN ELLYN, IL 60137

GARY, DAVE
OR CURRENT OWNER
2235 LOTUS CT
NAPERVILLE, IL 60565

CARLSTROM, STEVEN & LINDA
OR CURRENT OWNER
727 WILLIS AVE
GLEN ELLYN, IL 60137

CURTIS, JAMES & ANITA B
OR CURRENT OWNER
551 TAYLOR AVE
GLEN ELLYN, IL 60137

PRATT, MICHAEL R
OR CURRENT OWNER
705 WILLIS ST
GLEN ELLYN, IL 60137

BOWERS, MARLIN
OR CURRENT OWNER
674 DUANE ST
GLEN ELLYN, IL 60137

CANN, ROBIN J
OR CURRENT OWNER
3 ELLYN CT
GLEN ELLYN, IL 60137

LUND, DIANA E
OR CURRENT OWNER
474 MONTCLAIR AVE
GLEN ELLYN, IL 60137

CIPRIANO, MICHAEL A
OR CURRENT OWNER
620 DUANE ST
GLEN ELLYN, IL 60137

MAZZA, MICHAEL & MARY E
OR CURRENT OWNER
686 CRESCENT BLVD
GLEN ELLYN, IL 60137

COMELLA, MAUREEN
OR CURRENT OWNER
700 DUANE ST
GLEN ELLYN, IL 60137

WELDON, ROBERT A
OR CURRENT OWNER
3405 HIGHLAND CT
GLENVIEW, IL 60025

GOODMAN, MARILYN W
OR CURRENT OWNER
2222 35TH ST
OAK BROOK, IL 60523

HAGGLUND, PHILLIP &DEBBIE
OR CURRENT OWNER
543 PARK ROW
GLEN ELLYN, IL 60137

HIRA, MAHESH G
OR CURRENT OWNER
624 N DUANE ST
GLEN ELLYN, IL 60137

PETERS, SUSAN A
OR CURRENT OWNER
541 PARK ROW
GLEN ELLYN, IL 60137

SAYERS JR, E 65971
OR CURRENT OWNER
610 DUANE ST
GLEN ELLYN, IL 60137

FORTELKA, BRUCE P
OR CURRENT OWNER
719 WILLIS ST
GLEN ELLYN, IL 60137

KIEFT, B & D MAXCY JR
OR CURRENT OWNER
570 CRESCENT BLVD #308
GLEN ELLYN, IL 60137

LYONS JR, SCOTTY &KATHRYN
OR CURRENT OWNER
557 TAYLOR AVE
GLEN ELLYN, IL 60137

BOWER, JOHN & KATHERINE
OR CURRENT OWNER
616 DUANE ST
GLEN ELLYN, IL 60137

FERA, KATHLEEN
OR CURRENT OWNER
570 CRESCENT BLVD #302
GLEN ELLYN, IL 60137

SPANDIKOW JR, MARK S
OR CURRENT OWNER
509 ELM ST
GLEN ELLYN, IL 60137

JONES, LYNETTE S
OR CURRENT OWNER
720 DUANE ST
GLEN ELLYN, IL 60137

TOLIOS, ANGELO & PATRICIA
OR CURRENT OWNER
1514 STONEGATE RD
LA GRANGE PARK, IL 60526

MEAD, MARJORIE EILEEN
OR CURRENT OWNER
2117 HALLMARK CT
WHEATON, IL 60187

SLECKMAN, RICHARD D
OR CURRENT OWNER
461 N MONTCLAIR AVE
GLEN ELLYN, IL 60137

DEACY, MARIBETH A
OR CURRENT OWNER
570 CRESCENT BLVD #210
GLEN ELLEN, IL 60137

TRUST CO IL
OR CURRENT OWNER
1901 BUTTERFIELD #1000
DOWNERS GROVE, IL 60515

FRIES, JAMES & DIANA
OR CURRENT OWNER
644 SPALDING AVE
GLEN ELLYN, IL 60137

WAGNER, ANNE B
OR CURRENT OWNER
1483 LANDINGS LAKE DR
SARASOTA, FL 34231

REDMOND, CECIL E
OR CURRENT OWNER
1 ELLYN CT
GLEN ELLYN, IL 60137

BROWN, LAWRENCE
OR CURRENT OWNER
553 TAYLOR AVE
GLEN ELLYN, IL 60137

~~LANE, HELENE B~~
~~OR CURRENT OWNER~~
~~570 CRESCENT BLVD #202~~
~~GLEN ELLYN, IL 60137~~

HALE, DONNA S
OR CURRENT OWNER
611 LAKE RD
GLEN ELLYN, IL 60137

LUDINGTON, MATTHEW & NIKI
OR CURRENT OWNER
8 ELLYN CT
GLEN ELLYN, IL 60137

PAUL, CAROL
OR CURRENT OWNER
570 CRESCENT BLVD #405
GLEN ELLYN, IL 60137

~~GLEN ELLYN PARK DIST~~
~~OR CURRENT OWNER~~
~~185 SPRING AVE~~
~~GLEN ELLYN, IL 60137~~

LOGHMANI, CIAMACK
OR CURRENT OWNER
5454 ZELZAH AVE #215
ENCENCINO, CA 91316

ROSS, ROBERT & CYNTHIA
OR CURRENT OWNER
1450 CHAMPION FOREST
WHEATON, IL 60187

JOURDAN, ROBERT
OR CURRENT OWNER
22W301 AHLSTRAND RD
GLEN ELLYN, IL 60137-1352

EVANSON, WM KENT
OR CURRENT OWNER
7 ELLYN CT
GLEN ELLYN, IL 60137

SKRYD, JOHN A
OR CURRENT OWNER
600 AHLSTRAND DR
GLEN ELLYN, IL 60137

PETERSON, WILLIAM B
OR CURRENT OWNER
567 TAYLOR AVE
GLEN ELLYN, IL 60137

CENTRAL DUPAGE HEALTH
OR CURRENT OWNER
27W363 JEWEL RD
WINFIELD, IL 60190

LANE, HELENE B
OR CURRENT OWNER
570 CRESCENT BLVD #202
GLEN ELLYN, IL 60137

KLEIN, TOM
OR CURRENT OWNER
570 CRESCENT BLVD #306
GLEN ELLYN, IL 60137

RYAN, RALPH & KATHERINE
OR CURRENT OWNER
570 CRESCENT BLVD #503
GLEN ELLYN, IL 60137

TYAHLA, DAVID A
OR CURRENT OWNER
586 CRESCENT BLVD #301
GLEN ELLYN, IL 60137

DAN, BERNARD W
OR CURRENT OWNER
570 CRESCENT BLVD #309
GLEN ELLYN, IL 60137

KLEIN, TOM
OR CURRENT OWNER
570 CRESCENT BLVD #306
GLEN ELLYN, IL 60137

MC NAMARA, KEVIN M &JULIE
OR CURRENT OWNER
1525 HIDDEN ACRES
NEEHAH, WI 54956

SEIDELL, KATHLEEN A
OR CURRENT OWNER
671 REVERE RD
GLEN ELLYN, IL 60137

BENTEL JR, ROBERT W & G R
OR CURRENT OWNER
570 CRESCENT BLVD #505
GLEN ELLYN, IL 60137

CAREY, CAROL H
OR CURRENT OWNER
1914 MIDDLETON CT
WHEATON, IL 60189

NIERHOFF, ANDREA C
OR CURRENT OWNER
28435 EMERALD GREEN DR
WARRENVILLE, IL 60555

BURDI, MICHAEL
OR CURRENT OWNER
58 E WALTON
CHICAGO, IL 60611

JONKHEER, PERRY L & D L
OR CURRENT OWNER
586 CRESCENT BLVD #204
GLEN ELLYN, IL 60137

BLUM, BARBARA
OR CURRENT OWNER
570 CRESCENT BLVD #409
GLEN ELLYN, IL 60137

WETTLAUFER, SHARON
OR CURRENT OWNER
570 CRESCENT BLVD #310
GLEN ELLYN, IL 60137

ROSS, ROBERT & CYNTHIA
OR CURRENT OWNER
1450 CHAMPION FOREST
WHEATON, IL 60187

MATUSIAK, JOHN & BARBARA
OR CURRENT OWNER
570 CRESCENT BLVD #506
GLEN ELLYN, IL 60137

MATUSIAK, JOHN & BARBARA
OR CURRENT OWNER
570 CRESCENT BLVD #506
GLEN ELLYN, IL 60137

CAREY, CAROL H
OR CURRENT OWNER
1914 MIDDLETON CT
WHEATON, IL 60189

SCHWIND, GEORGE R
OR CURRENT OWNER
20 PEREGRINE XING
SAVANAH, GA 31411

KRAMER, ROBERT F
OR CURRENT OWNER
586 CRESCENT BLVD #202F
GLEN ELLYN, IL 60137

CRESCENT PROP LLC
OR CURRENT OWNER
570 CRESCENT BLVD #203
GLEN ELLYN, IL 60137

KIEFT, B & D MAXCY JR
OR CURRENT OWNER
570 CRESCENT BLVD #308
GLEN ELLYN, IL 60137

MARSH, DONALD B
OR CURRENT OWNER
586 CRESCENT BLVD #503
GLEN ELLYN, IL 60137

MOTSINGER, JOHN & DEBORAH
OR CURRENT OWNER
586 CRESCENT BLVD #502
GLEN ELLYN, IL 60137

ROSENBERG, RACHELLE A
OR CURRENT OWNER
2551 S ROOKWOOD DR
CINCINNATI, OH 45208

TOLIOS, ANGELO & PATRICIA
OR CURRENT OWNER
1514 STONEGATE RD
LA GRANGE PARK, IL 60526

HEIDT, EUGENE J
OR CURRENT OWNER
586 CRESCENT BLVD #203
GLEN ELLYN, IL 60137

BURDI, MICHAEL
OR CURRENT OWNER
58 E WALTON
CHICAGO, IL 60611

JONES, DONNA P
OR CURRENT OWNER
586 CRESCENT BLVD #501
GLEN ELLYN, IL 60137

WAGNER, ANNE B
OR CURRENT OWNER
1483 LANDINGS LAKE DR
SARASOTA, FL 34231

BRZEZICKI, LOUISE A
OR CURRENT OWNER
570 CRESCENT BLVD #401
GLEN ELLYN, IL 60137

BLOOM, RODNEY M & MARY L
OR CURRENT OWNER
586 CRESCENT BLVD #403
GLEN ELLYN, IL 60137

BLOOMSTRAND, GRACE M
OR CURRENT OWNER
586 CRESCENT BLVD #201
GLEN ELLYN, IL 60137

SWAIN, GARY V
OR CURRENT OWNER
570 CRESCENT BLVD #204
GLEN ELLYN, IL 60137

SAMMARCO, BRIAN & K
OR CURRENT OWNER
586 CRESCENT BLVD #306
GLEN ELLYN, IL 60137

FULLER, H LAURANCE & N
OR CURRENT OWNER
570 CRESCENT BLVD #303
GLEN ELLYN, IL 60137

BALL, ANNA C
OR CURRENT OWNER
708 CRESCENT BLVD
GLEN ELLYN, IL 60137-4208

BOHLIN, NANCY
OR CURRENT OWNER
570 CRESCENT BLVD #404
GLEN ELLYN, IL 60137

BLUM, BARBARA
OR CURRENT OWNER
570 CRESCENT BLVD #409
GLEN ELLYN, IL 60137

HOWARD, MICHAEL P
OR CURRENT OWNER
570 CRESCENT BLVD #507
GLEN ELLYN, IL 60137

BUS, STEPHEN G
OR CURRENT OWNER
586 CRESCENT BLVD #206
GLEN ELLYN, IL 60137

WETTLAUFER, SHARON
OR CURRENT OWNER
570 CRESCENT BLVD #310
GLEN ELLYN, IL 60137

BALDWIN, JAMES P
OR CURRENT OWNER
570 CRESCENT BLVD #402
GLEN ELLYN, IL 60137

SAMMARCO, BRIAN & K
OR CURRENT OWNER
589 CRESCENT BLVD #306
GLEN ELLYN, IL 60137

BECK, HELEN F
OR CURRENT OWNER
111 E JEFFERSON AVE
NAPERVILLE, IL 60540

BERRY, ROBERT F
OR CURRENT OWNER
586 CRESCENT BLVD #307
GLEN ELLYN, IL 60137

BLOOMSTRAND, GRACE M
OR CURRENT OWNER
586 CRESCENT BLVD #201
GLEN ELLYN, IL 60137

MANAK, THOMAS J & R A
OR CURRENT OWNER
586 CRESCENT BLVD #401
GLEN ELLYN, IL 60137

WEBER, RICHARD A
OR CURRENT OWNER
570 CRESCENT BLVD #304
GLEN ELLYN, IL 60137

KAHN, JOHN E & SANDRA A
OR CURRENT OWNER
586 CRESCENT BLVD #303
GLEN ELLYN, IL 60137

GLENSTONE CONDO ASSOC
OR CURRENT OWNER
322 W BURLINGTON
LA GRANGE, IL 60525

DWYER JR, JAMES A
OR CURRENT OWNER
2100 ELECTRONICS LN
FT MEYERS, FL 33912

MARSH, DONALD B
OR CURRENT OWNER
586 CRESCENT BLVD #503
GLEN ELLYN, IL 60137

NELSON, ELIZABETH C
OR CURRENT OWNER
570 CRESCENT BLVD #206
GLEN ELLYN, IL 60137

SPIEZIO JR, JOHN F & M J
OR CURRENT OWNER
570 CRESCENT BLVD #305
GLEN ELLYN, IL 60137

BUS, STEPHEN G
OR CURRENT OWNER
586 CRESCENT BLVD #206
GLEN ELLYN, IL 60137

BRZEZICKI, LOUISE A
OR CURRENT OWNER
570 CRESCENT BLVD #401
GLEN ELLYN, IL 60137

BALL, ANNA C
OR CURRENT OWNER
708 CRESCENT BLVD
GLEN ELLYN, IL 60137-4208

BARNES, JAMES A & KAREN K
OR CURRENT OWNER
586 CRESCENT BLVD #402
GLEN ELLYN, IL 60137

BERRY, ROBERT F
OR CURRENT OWNER
586 CRESCENT BLVD #307
GLEN ELLYN, IL 60137

JONES, DONNA P
OR CURRENT OWNER
586 CRESCENT BLVD #501
GLEN ELLYN, IL 60137

NELSON, ELIZABETH C
OR CURRENT OWNER
570 CRESCENT BLVD #206
GLEN ELLYN, IL 60137

MC NAMARA, KEVIN M &JULIE
OR CURRENT OWNER
1525 HIDDEN ACRES
NEENAH, WI 54956

KRAMER, ROBERT F
OR CURRENT OWNER
586 CRESCENT BLVD #202F
GLEN ELLYN, IL 60137

GANZHORN, RICHARD C
OR CURRENT OWNER
441 PARK BLVD #41
GLEN ELLYN, IL 60137

WARRICK, KAREN
OR CURRENT OWNER
445 N PARK BLVD #2-D
GLEN ELLYN, IL 60137

FERA, KATHLEEN
OR CURRENT OWNER
6530 DOUBLE EAGLE DR #52
WOODRIDGE, IL 60517

WEIGEL, MURIEL N
OR CURRENT OWNER
441 PARK BLVD #4-G
GLEN ELLYN, IL 60137

DUBISHAR, HOWARD L
OR CURRENT OWNER
1216 30TH ST NE
CEDAR RAPIDS, IA 52402

BOWERS, JAMES P
OR CURRENT OWNER
441 N PARK BLVD #2C
GLEN ELLYN, IL 60137

PLASSCHAERT, E & C KROPP
OR CURRENT OWNER
506 TAYLOR AVE #E
GLEN ELLYN, IL 60137

DUBISHAR, HOWARD L
OR CURRENT OWNER
1216 30TH ST NE
CEDAR RAPIDS, IA 52402

LOMBARDO, FRANK
OR CURRENT OWNER
1N680 FOREST AVE
GLEN ELLYN, IL 60137

STONE, STUART S
OR CURRENT OWNER
189 N LAMBERT RD
GLEN ELLYN, IL 60137

THEILGAARD, SHERRY C
OR CURRENT OWNER
441 PARK BLVD #3-F
GLEN ELLYN, IL 60137

HOWARD, MICHAEL P
OR CURRENT OWNER
570 CRESCENT BLVD #507
GLEN ELLYN, IL 60137

SAMMARCO, BRIAN & K
OR CURRENT OWNER
586 CRESCENT BLVD #306
GLEN ELLYN, IL 60137

WEATHERRED, ELIZABETH H
OR CURRENT OWNER
445 N PARK BLVD #2E
GLEN ELLYN, IL 60137

FLORADAY, BURTON S & V D
OR CURRENT OWNER
441 N PARK BLVD #3H
GLEN ELLYN, IL 60137

US BANK
OR CURRENT OWNER
3476 STATEVIEW BLVD
FORT MILL, SC 29715

ROSE, NEIL M & PATRICIA M
OR CURRENT OWNER
441 N PARK BLVD #1-M
GLEN ELLYN, IL 60137

BUCH, JESSICA J
OR CURRENT OWNER
570 CRESCENT BLVD #406
GLEN ELLYN, IL 60137

MARTIN, JOSEPH & RENEE
OR CURRENT OWNER
586 CRESCENT BLVD #305
GLEN ELLYN, IL 60137

PAULIN, RUTH E & E G
OR CURRENT OWNER
445 N PARK BLVD #3J
GLEN ELLYN, IL 60137

HOTH, DOROTHY
OR CURRENT OWNER
570 CRESCENT BLVD #408
GLEN ELLYN, IL 60137

SIME, JOHN W
OR CURRENT OWNER
441 PARK BLVD 3-D
GLEN ELLYN, IL 60137

MATZE, CHARLES & MARCELLA
OR CURRENT OWNER
445 PARK BLVD #3G
GLEN ELLYN, IL 60137

SWAIN, GARY V
OR CURRENT OWNER
570 CRESENT BLVD #204
GLEN ELLYN, IL 60137

FERA, KATHLEEN
OR CURRENT OWNER
570 CRESCENT BLVD
GLEN ELLYN, IL 60137

THOMAS, SUZANNE
OR CURRENT OWNER
445 PARK BLVD #5-C
GLEN ELLYN, IL 60137

MOTSINGER, JOHN & DEBORAH
OR CURRENT OWNER
586 CRESCENT BLVD #502
GLEN ELLYN, IL 60137

SCHULTZ, VALERIE T
OR CURRENT OWNER
441 N PARK BLVD #2E
GLEN ELLYN, IL 60137

MOTSINGER, JOHN & DEBORAH
OR CURRENT OWNER
586 CRESCENT BLVD #502
GLEN ELLYN, IL 60137

DAVIS, STANLEY W
OR CURRENT OWNER
13220 HARBOUR RIDGE BL
PALM CITY, FL 64990

DANIELS, SUSAN G
OR CURRENT OWNER
441 N PARK BLVD #5D
GLEN ELLYN, IL 60137

DORNFELD, PAUL & BARBARA
OR CURRENT OWNER
441 PARK BLVD #2-A
GLEN ELLYN, IL 60137

POWERS, CHARLAINE L
OR CURRENT OWNER
441 N PARK BLVD 3-J
GLEN ELLYN, IL 60137

DONOVAN, LEE E & EVA M
OR CURRENT OWNER
508 TAYLOR AVE #C
GLEN ELLYN, IL 60137

SOBIE, RICHARD S & M A
OR CURRENT OWNER
445 PARK BLVD #3I
GLEN ELLYN, IL 60137

BALDWIN, JAMES P
OR CURRENT OWNER
570 CRESCENT BLVD #402
GLEN ELLYN, IL 60137

KUSMAN, LINDA
OR CURRENT OWNER
510 TAYLOR AVE #D
GLEN ELLYN, IL 60137

LANNON, MARIE S
OR CURRENT OWNER
445 N PARK BLVD #3D
GLEN ELLYN, IL 60137

BUDISELICH, EDNA K
OR CURRENT OWNER
445 PARK BLVD #2-C
GLEN ELLYN, IL 60137

DOMERACKI, LAURENCE J
OR CURRENT OWNER
481 DUANE
GLEN ELLYN, IL 60137

MANNING, KEITH E
OR CURRENT OWNER
441 PARK BLVD #4-F
GLEN ELLYN, IL 60137

FETSCHER, BARBARA A
OR CURRENT OWNER
445 N PARK BLVD #5-F
GLEN ELLYN, IL 60137

PLISCH AUDREY
OR CURRENT OWNER
445 PARK BLVD #2-F
GLEN ELLYN, IL 60137

FLEMM, TAMARA
OR CURRENT OWNER
441 PARK BLVD #5-B
GLEN ELLYN, IL 60137

SPIEZIO JR, JOHN F & M J
OR CURRENT OWNER
570 CRESCENT BLVD #305
GLEN ELLYN, IL 60137

MATTHEW, SHARON L
OR CURRENT OWNER
445 N PARK BLVD #5E
GLEN ELLYN, IL 60137

BUCH, JESSICA
OR CURRENT OWNER
570 CRESCENT BLVD #406
GLEN ELLYN, IL 60137

BALDWIN, JAMES P
OR CURRENT OWNER
570 CRESCENT BLVD #402
GLEN ELLYN, IL 60137

LEATH, SUSAN
OR CURRENT OWNER
506 TAYLOR AVE #D
GLEN ELLYN, IL 60137

HEIDT, EUGENE J
OR CURRENT OWNER
586 CRESCENT BLVD #203
GLEN ELLYN, IL 60137

PETROVIC, BENJAMIN R
OR CURRENT OWNER
485 DUANE TERRACE #C-1
GLEN ELLYN, IL 60137

COOK, BARBARA B
OR CURRENT OWNER
445 PARK BLVD #5D
GLEN ELLYN, IL 60137

SITTIG, EDWIN & LOIS
OR CURRENT OWNER
1155 S EDGEWOOD
LOMBARD, IL 60148

CAREY, RACHEL
OR CURRENT OWNER
1914 MIDDLETON CT
WHEATON, IL 60189

FULLER, H LAURANCE & N
OR CURRENT OWNER
570 CRESCENT BLVD #303
GLEN ELLYN, IL 60137

CASSEY, ROBERT B
OR CURRENT OWNER
445 N PARK BLVD #2 A
GLEN ELLYN, IL 60137

CALKINS, WILLIAM & ANNA M
OR CURRENT OWNER
445 PARK BLVD #4G
GLEN ELLYN, IL 60137

JONES, RUTH
OR CURRENT OWNER
445 N PARK BLVD #2J
GLEN ELLYN, IL 60137

PEARCE, ROBERT D
OR CURRENT OWNER
481 DUANE TERR #B2
GLEN ELLYN, IL 60137

BARTLETT, JOEL & LAURA
OR CURRENT OWNER
504 TAYLOR AVE #F
GLEN ELLYN, IL 60137

STRATTON, SCOTT & ANN
OR CURRENT OWNER
445 N PARK BLVD #5-B
GLEN ELLYN, IL 60137

O BRIEN, RUSSELL & JEAN
OR CURRENT OWNER
445 N PARK BLVD #4B
GLEN ELLYN, IL 60137

PLASZEWSKI, THADDEUS F
OR CURRENT OWNER
1346 IRIS AVE
CAROL STREAM, IL 60188

STEINHILBER, JANE C
OR CURRENT OWNER
445 N PARK BLVD #5-I
GLEN ELLYN, IL 60137

FRANCIS, WILSON G
OR CURRENT OWNER
206 N MAIN ST
GLEN ELLYN, IL 60137

JONES, WINSLOW & DONNA
OR CURRENT OWNER
586 CRESCENT BLVD #501
GLEN ELLYN, IL 60137

BLOOM, RODNEY M & MARY L
OR CURRENT OWNER
586 CRESCENT BLVD #403
GLEN ELLYN, IL 60137

MERCER, SUZANNE
OR CURRENT OWNER
485 DUANE TERR #A-3
GLEN ELLYN, IL 60137

GILARDI, DONALD & C A
OR CURRENT OWNER
441 N PARK BLVD #5-G
GLEN ELLYN, IL 60137

TYAHLA, DAVID A
OR CURRENT OWNER
586 CRESCENT BLVD #301
GLEN ELLYN, IL 60137

PRATHER, BRUCE C & LAURA
OR CURRENT OWNER
485 DUANE TERR #B-3
GLEN ELLYN, IL 60137

LESHER, REVELLE M TRUST
OR CURRENT OWNER
445 PARK BLVD #2-H
GLEN ELLYN, IL 60137

ROE, PATRICIA BARRETT
OR CURRENT OWNER
441 N PARK BLVD #3-C
GLEN ELLYN, IL 60137

CASTRO, SAMUEL & LORNA
OR CURRENT OWNER
481 DUANE TERR #B-4
GLEN ELLYN, IL 60137

FERNGREN, MARY
OR CURRENT OWNER
445 PARK BLVD #3F
GLEN ELLYN, IL 60137

DIETER TR, BETTE R
OR CURRENT OWNER
22W240 STANTON
GLEN ELLYN, IL 60137

SUACILLO, CHRISTINE
OR CURRENT OWNER
485 DUANE TERR #A-1
GLEN ELLYN, IL 60137

KLOSS, DAVID
OR CURRENT OWNER
485 DUANE TERR #B4
GLEN ELLYN, IL 60137

MIRIC, SLOBODANKA
OR CURRENT OWNER
0N125 COTTONWOOD DR
WHEATON, IL 60187

CERALDE, VINCE
OR CURRENT OWNER
228 BURNSIDE CIR
BARTLETT, IL 60103

GORDON, VELDA L
OR CURRENT OWNER
485 DUANE TERR #C-2
GLEN ELLYN, IL 60137

PRINKE, PAUL & MARGARET
OR CURRENT OWNER
825 EVERGREEN
GLEN ELLYN, IL 60137

FROST, JACK E & KATHRYN M
OR CURRENT OWNER
441 PARK BLVD #4-K
GLEN ELLYN, IL 60137

BROKAW, GERALDINE I
OR CURRENT OWNER
445 N PARK BLVD #3H
GLEN ELLYN, IL 60137

DEUTSCHE BANK
OR CURRENT OWNER

SANTA ANA, CA 92711

FREYMARK, HELEN R TRUST
OR CURRENT OWNER
441 N PARK BLVD #2-G
GLEN ELLYN, IL 60137

REICHARDT, GARY
OR CURRENT OWNER
441 N PARK BLVD #4-E
GLEN ELLYN, IL 60137

FERNALD, MATHEW & JANINE
OR CURRENT OWNER
506 TAYLOR AVE #A
GLEN ELLYN, IL 60137

BANIK, KATHERINE A
OR CURRENT OWNER
485 DUANE TERR #A2
GLEN ELLYN, IL 60137

STAUDT, SUSAN V
OR CURRENT OWNER
372 GRANDVIEW AVE
GLEN ELLYN, IL 60137

BROCK, HUNTER
OR CURRENT OWNER
508 TAYLOR AVE #B
GLEN ELLYN, IL 60137

BOURLOUKOS, GEORGE A
OR CURRENT OWNER
485 DUANE TERR #C3
GLEN ELLYN, IL 60137

ELSON, EVELYN E
OR CURRENT OWNER
441 N PARK BLVD #2D
GLEN ELLYN, IL 60137

WHITE, ROSEMARY
OR CURRENT OWNER
445 N PARK BLVD
GLEN ELLYN, IL 60137

DABROWSKI, KARI A
OR CURRENT OWNER
445 N PARK BLVD #3K
GLEN ELLYN, IL 60137

SCHULTZ, STANLEY
OR CURRENT OWNER
445 PARK #4E
GLEN ELLYN, IL 60137

SCEEREY, DONNA
OR CURRENT OWNER
506 TAYLOR AVE #C
GLEN ELLYN, IL 60137

STRZETELSKI, JACEK & EWA
OR CURRENT OWNER
508 TAYLOR AVE #D
GLEN ELLYN, IL 60137

HOSKINS, WILLIAM & RUBY
OR CURRENT OWNER
445 PARK BLVD #5A
GLEN ELLYN, IL 60137

RODRIGUEZ, EFREN
OR CURRENT OWNER
481 DUANE TERR #D4
GLEN ELLYN, IL 60137

MINAUDO, ANTHONY & KATHY
OR CURRENT OWNER
481 DUANE TERR #C-3
GLEN ELLYN, IL 60137

MC CLOW, ROBERT L
OR CURRENT OWNER
445 N PARK BLVD #5H
GLEN ELLYN, IL 60137

CHICAGO TITLE LAND TRUST
OR CURRENT OWNER
171 N CLARK ST LL
CHICAGO, IL 60601

SAVENOK, SERGEY
OR CURRENT OWNER
441 PARK BLVD #3B
GLEN ELLYN, IL 60137

PETRAUSKAS, BERNADETTE L
OR CURRENT OWNER
441 PARK BLVD 3-K
GLEN ELLYN, IL 60137

DELUCA, ARNOLD A
OR CURRENT OWNER

WHEATON, IL 60189

EVANS, WANDA
OR CURRENT OWNER
441 N PARK BLVD #3-I
GLEN ELLYN, IL 60137

SHAUGHNESSY, WILLIAM & M
OR CURRENT OWNER
445 PARK BLVD #1-M
GLEN ELLYN, IL 60137

SHELDON, SAMUEL & JEAN
OR CURRENT OWNER
445 N PARK BLVD #2-B
GLEN ELLYN, IL 60137

AMATO, AMALIA
OR CURRENT OWNER
441 N PARK BLVD #5H
GLEN ELLYN, IL 60137

URGO, BARBARA A
OR CURRENT OWNER
445 PARK BLVD #2-1
GLEN ELLYN, IL 60137

GACHICH, LILLIANA
OR CURRENT OWNER
445 N PARK BLVD #2K
GLEN ELLYN, IL 60137

BOSKOVIC, MICHAEL
OR CURRENT OWNER
15 N BRANDON DR
GLENDALE HTS, IL 60139

WILSON, COURTNEY L
OR CURRENT OWNER
510 TAYLOR AVE #E
GLEN ELLYN, IL 60137

MEJIA, TAMARA L
OR CURRENT OWNER
481 DUANE TERR #C-1
GLEN ELLYN, IL 60137

MATHEWS, WALTER & DOROTHY
OR CURRENT OWNER
445 N PARK BLVD #4A
GLEN ELLYN, IL 60137

ROSENBERG, RACHELLE A
OR CURRENT OWNER
2551 S ROOKWOOD DR
CINCINNATI, OH 45208

SCHWIND, GEORGE & DIANE
OR CURRENT OWNER
20 PEREGRINE XING
SAVANAH, GA 31411

LEONARD, CAROLYN M
OR CURRENT OWNER
441 N PARK BLVD #4D
GLEN ELLYN, IL 60137

DEACY, MARIBETH A
OR CURRENT OWNER
570 CRESCENT BLVD #210
GLEN ELLYN, IL 60137

SEIDELL, KATHLEEN A
OR CURRENT OWNER
671 REVERE RD
GLEN ELLYN, IL 60137

DI GIOIA, MICHAEL J & P
OR CURRENT OWNER
445 PARK BLVD #3B
GLEN ELLYN, IL 60137

PAUL, CAROL
OR CURRENT OWNER
570 CRESCENT BLVD #405
GLEN ELLYN, IL 60137

BLOOM, RODNEY M & MARY L
OR CURRENT OWNER
586 CRESCENT BLVD #403
GLEN ELLYN, IL 60137

KAUTZ, KAREN M
OR CURRENT OWNER
445 N PARK BLVD #4F
GLEN ELLYN, IL 60137

BOHLIN, NANCY
OR CURRENT OWNER
570 CRESCENT BLVD #404
GLEN ELLYN, IL 60137

BARNES, JAMES A & KAREN K
OR CURRENT OWNER
586 CRESCENT BLVD #402
GLEN ELLYN, IL 60137

BENNETT, TIMOTHY J
OR CURRENT OWNER
586 CRESCENT BLVD #302
GLEN ELLYN, IL 60137

BUCH, JESSICA J
OR CURRENT OWNER
570 CRESCENT BLVD #406
GLEN ELLYN, IL 60137

MUELLER, MICHAEL & LINDA
OR CURRENT OWNER
570 CRESCENT BLVD #407
GLEN ELLYN, IL 60137

STONE, DOUGLAS J & M D
OR CURRENT OWNER
586 CRESCENT BLVD #304
GLEN ELLYN, IL 60137

FULLER, H LAURANCE & N
OR CURRENT OWNER
570 CRESCENT BLVD #303
GLEN ELLYN, IL 60137

SKRYD, JOHN A
OR CURRENT OWNER
600 AHLSTRAND DR
GLEN ELLYN, IL 60137

ROSS, ROBERT & CYNTHIA
OR CURRENT OWNER
1450 CHAMPION FOREST
WHEATON, IL 60187

BENTEL JR, ROBERT W & G R
OR CURRENT OWNER
570 CRESCENT BLVD #505
GLEN ELLYN, IL 60137

KAHN, JOHN E & SANDRA A
OR CURRENT OWNER
586 CRESCENT BLVD #303
GLEN ELLYN, IL 60137

DWYER JR, JAMES A
OR CURRENT OWNER
2100 ELECTRINICS LN
FT MEYERS, FL 33912

US BANK
OR CURRENT OWNER
3476 STATEVIEW BLVD
FORT MILL, SC 29715

BOCINA, NANCY
OR CURRENT OWNER
570 CRESCENT BLVD #301
GLEN ELLYN, IL 60137

MARTIN, JOSEPH & RENEE
OR CURRENT OWNER
586 CRESCENT BLVD #305
GLEN ELLYN, IL 60137

SEIDELL, KATHLEEN A
OR CURRENT OWNER
671 REVERE RD
GLEN ELLYN, IL 60137

DAN, BERNARD W
OR CURRENT OWNER
570 CRESCENT BLVD #309
GLEN ELLYN, IL 60137

JONKHEER, PERRY L & D L
OR CURRENT OWNER
586 CRESCENT BLVD #204
GLEN ELLYN, IL 60137

HOTH, DOROTHY
OR CURRENT OWNER
570 CRESCENT BLVD #408
GLEN ELLYN, IL 60137

COZZI, ELLIE
OR CURRENT OWNER
441 N PARK BLVD #4B
GLEN ELLYN, IL 60137

MUELLER, MICHAEL & LINDA
OR CURRENT OWNER
570 CRESCENT BLVD #407
GLEN ELLYN, IL 60137

WETTLAUFER, SHARON W
OR CURRENT OWNER
570 CRESCENT BLVD #310
GLEN ELLYN, IL 60137

BLUHM, ERIC & COLLEEN
OR CURRENT OWNER
115 N PARK BLVD #3C
GLEN ELLYN, IL 60137

KASAL, BLANCHE W
OR CURRENT OWNER
445 PARK BLVD #4K
GLEN ELLYN, IL 60137

SWAIN, GARY V
OR CURRENT OWNER
570 CRESCENT BLVD #204
GLEN ELLYN, IL 60137

RUZICH, S & G RAMOS
OR CURRENT OWNER
504 TAYLOR AVE #C
GLEN ELLYN, IL 60137

LIEBICH, JULIA
OR CURRENT OWNER
504 E TAYLOR #E
GLEN ELLYN, IL 60137

NELSON, ELIZABETH C
OR CURRENT OWNER
570 CRESCENT BLVD #206
GLEN ELLYN, IL 60137

BOGOSIAN, TIMOTHY
OR CURRENT OWNER
485 DUANE TERR #C-4
GLEN ELLYN, IL 60137

HALL, JEREMIAH J
OR CURRENT OWNER
481 DUANNE TERR #D2
GLEN ELLYN, IL 60137

JONES, DONNA P
OR CURRENT OWNER
586 CRESCENT BLVD #501
GLEN ELLYN, IL 60137

KENWARD, JAMES & COLLETTE
OR CURRENT OWNER
441 PARK BLVD #5I
GLEN ELLYN, IL 60137

TOLEDO, JOSEPHINE M
OR CURRENT OWNER
441 PARK BLVD 2K
GLEN ELLYN, IL 60137

MARSH, DONALD B
OR CURRENT OWNER
586 CRESCENT BLVD #503
GLEN ELLYN, IL 60137

BOYD, ELSIE R
OR CURRENT OWNER
445 PARK BLVD #2G
GLEN ELLYN, IL 60137

DERVIS, GEORGE & ANN
OR CURRENT OWNER
1198 ROYAL GLEN DR #209A
GLEN ELLYN, IL 60137

SUTPHEN, CONSTANCE
OR CURRENT OWNER
441 N PARK BLVD #2-J
GLEN ELLYN, IL 60137

PENNEY, SCOTT & LISA
OR CURRENT OWNER
510 TAYLOR AVE #A
GLEN ELLYN, IL 60137

CHURCHILL, KEVIN M
OR CURRENT OWNER
508 TAYLOR #F
GLEN ELLYN, IL 60137

BRANDT, SHIRLEY
OR CURRENT OWNER
441 PARK BLVD #3-G
GLEN ELLYN, IL 60137

OGAR, KONRAD
OR CURRENT OWNER
481 DUANE TERR #C4
GLEN ELLYN, IL 60137

STOP PROPERTIES LLC
OR CURRENT OWNER
12305 S NEW AVE #H
LEMONT, IL 60439

BOLAND, MARY & JOHN J
OR CURRENT OWNER
445 PARK BLVD 4-J
GLEN ELLYN, IL 60137

HANNENBERG, GARY W & RUTH
OR CURRENT OWNER
441 N PARK BLVD #2F
GLEN ELLYN, IL 60137

SADLOWSKI, ROSEMARIE
OR CURRENT OWNER
441 N PARK BLVD #5J
GLEN ELLYN, IL 60137

BURBULIS, CHRISTINE
OR CURRENT OWNER
445 N PARK BLVD #5G
GLEN ELLYN, IL 60137

STARZYK, LORETTA
OR CURRENT OWNER
441 PARK BLVD #5K
GLEN ELLYN, IL 60137

GROGAN, MARILYN J
OR CURRENT OWNER
445 N PARK BLVD #3A
GLEN ELLYN, IL 60137

TRELAND, JOAN P
OR CURRENT OWNER
441 N PARK BLVD #5-F
GLEN ELLYN, IL 60137

WEST SUBURBAN BANK
OR CURRENT OWNER
441 N PARK BLVD #4-C
GLEN ELLYN, IL 60137

TABBARA, OMAR
OR CURRENT OWNER
510 TAYLOR AVE #B
GLEN ELLYN, IL 60137

SZEWCZYK, KRZYSZTOF
OR CURRENT OWNER
3S381 WINFIELD RD
WARREVILLE, IL 60555

BENTEL JR, ROBERT W & G R
OR CURRENT OWNER
570 CRESCENT BLVD #505
GLEN ELLYN, IL 60137

ADDUCI, ANDREW D
OR CURRENT OWNER
441 PARK BLVD #5-A
GLEN ELLYN, IL 60137

KUTASHY, MAGDA M
OR CURRENT OWNER
481 DUANE TERR #D3
GLEN ELLYN, IL 60137

TYAHLA, DAVID A
OR CURRENT OWNER
586 CRESCENT BLVD #301
GLEN ELLYN, IL 60137

WILDERMUTH, EDWARD
OR CURRENT OWNER
506 TAYLOR AVE #F
GLEN ELLYN, IL 60137

WEBER, RICHARD A
OR CURRENT OWNER
570 CRESCENT BLVD #304
GLEN ELLYN, IL 60137

MANAK, THOMAS J & R A
OR CURRENT OWNER
586 CRESCENT BLVD #401
GLEN ELLYN, IL 60137

PRETE, KATHERINE A
OR CURRENT OWNER
481 DUANE TERR #A-3
GLEN ELLYN, IL 60137

GALLO, CARLO & R NORDBY
OR CURRENT OWNER
22W770 RED OAK DR
GLEN ELLYN, IL 60137

BOHLIN, NANCY
OR CURRENT OWNER
570 CRESCENT BLVD #404
GLEN ELLYN, IL 60137

CABAY, LAURA A
OR CURRENT OWNER
506 TAYLOR AVE #B
GLEN ELLYN, IL 60137

CRESCENT PROP LLC
OR CURRENT OWNER
256 SAWYER AVE
GLEN ELLYN, IL 60137

WAGNER, ANNE B
OR CURRENT OWNER
1483 LANDINGS LAKE DR
SARASOTA, FL 34231

KRAKAUSKY, GEORGE & L
OR CURRENT OWNER
508 TAYLOR AVE #E
GLEN ELLYN, IL 60137

RYAN, RALPH & KATHERINE
OR CURRENT OWNER
570 CRESCENT BLVD #503
GLEN ELLYN, IL 60137

LANE, HELENE B
OR CURRENT OWNER
570 CRESCENT BLVD #202
GLEN ELLYN, IL 60137

TUFANO, JERRY
OR CURRENT OWNER
485 DUANE TERR #A4
GLEN ELLYN, IL 60137

MANAK, THOMAS J & R A
OR CURRENT OWNER
586 CRESCENT BLVD #401
GLEN ELLYN, IL 60137

GALLO, CARLO & R NORDBY
OR CURRENT OWNER
22W770 RED OAK DR
GLEN ELLYN, IL 60137

DE LUCA, ARNOLD &K BARLOW
OR CURRENT OWNER

WHEATON, IL 60189

KRAMER, ROBERT F
OR CURRENT OWNER
586 CRESCENT BLVD #202F
GLEN ELLYN, IL 60137

BARNES, JAMES A & KAREN K
OR CURRENT OWNER
586 CRESCENT BLVD #402
GLEN ELLYN, IL 60137

HOAGLAND, BARBARA
OR CURRENT OWNER
441 N PARK BLVD #5C
GLEN ELLYN, IL 60137

US BANK
OR CURRENT OWNER
3476 STATEVIEW BLVD
FORT MILL, SC 29715

MC NAMARA, KEVIN M &JULIE
OR CURRENT OWNER
1525 HIDDEN ACRES
NEEHAH, WI 54956

BUKIET, LILLIAN M TR
OR CURRENT OWNER
445 N PARK BLVD #4-H
GLEN ELLYN, IL 60137

RYAN, RALPH & KATHERINE
OR CURRENT OWNER
570 CRESCENT BLVD #503
GLEN ELLYN, IL 60137

LYNCH, LOIS I
OR CURRENT OWNER
441 N PARK BLVD #4H
GLEN ELLYN, IL 60137

MYERS, WILLIAM S TRUSTEE
OR CURRENT OWNER
445 PARK BLVD #5-J
GLEN ELLYN, IL 60137

SCHWIND, GEORGE & DIANE
OR CURRENT OWNER
20 PEREGRINE XING
SAVANAH, GA 31411

BOCINA, NANCY
OR CURRENT OWNER
570 CRESCENT BLVD #301
GLEN ELLYN, IL 60137

BENNETT, TIMOTHY J
OR CURRENT OWNER
586 CRESCENT BLVD #302
GLEN ELLYN, IL 60137

STONE, DOUGLAS J & M D
OR CURRENT OWNER
586 CRESCENT BLVD #304
GLEN ELLYN, IL 60137

SKIPWORTH, LARRY & P
OR CURRENT OWNER
441 N PARK BLVD #2-I
GLEN ELLYN, IL 60137

WALDSCHMIDT, RONALD
OR CURRENT OWNER
441 N PARK BLVD #4-A
GLEN ELLYN, IL 60137

PRICE, WARREN & WANDA S
OR CURRENT OWNER
8409 BONITA ISLE DR
LAKE WORTH, FL 33467

DUNK, JUDITH A
OR CURRENT OWNER
504 TAYLOR AVE #B
GLEN ELLYN, IL 60137

## 10-10-12: VARIATIONS:

(A) A petition or application for Variation shall be filed with the Director, Department of Planning and Development, and shall contain at least the following information:

1. The name, address and phone number of the applicant, pursuant to Section 10-10-10;

2. The legal description, common address and permanent index number of the property to be benefited by the Variation;

3. Identification of the provisions of this Zoning Code from which the Variation is sought;

4. A description of the proposed use and/or Variation, including a dimensioned site plan or plat. The dimensioned site plan or plat need not be prepared by an architect or engineer;[2]

5. A brief summary of the factual evidence upon which the applicant will rely to show that the standards for Variation will be met;

(B) Upon application to the Department of Planning and Development, the Zoning Board of Appeals, after giving notice as provided herein and by the Illinois Revised Statutes, shall conduct a public hearing. The Zoning Board of Appeals shall also conduct public hearings and make recommendations to the Village Board regarding requested Variations from bulk regulations applicable to single-family lots in Planned Unit Developments, in accordance with the procedures established for other Variations in this Zoning Code, provided the conditions set forth in Section 10-10-15 (F) have been met. Any property owners association related to the Planned Unit Development shall be notified of any proposed Variations from bulk regulations in the same manner as that required for surrounding property owners in Section 10-10-11 (B) of this Code;[2]

(C) The Zoning Board of Appeals shall not recommend, and the Village Board shall not vary, the provisions of this Zoning Code, except in cases where there are practical difficulties or particular hardship in the way of carrying out the strict letter of any regulation of this Zoning Code relating to the use, construction or alteration of buildings or structures or the use of land, and unless it shall have made findings based upon the evidence presented to it in the following cases:

1. That the property in question cannot yield a reasonable return if permitted to be used only under the conditions allowed by the regulations governing the district in which it is located; and that the Variation, if granted, will not alter the essential character of the locality; or

2. That the plight of the owner is due to unique circumstances; and that the Variation, if granted, will not alter the essential character of the locality;

(D) For the purpose of supplementing the above standards, the Zoning Board of Appeals, in making its recommendation that there are practical difficulties or particular hardships, shall also take into consideration the extent to which the evidence establishes or fails to establish the following facts favorably to the applicant:

1. That the particular physical surroundings, shape or topographical condition of the specific property involved would bring particular hardship upon the owner as distinguished from a mere inconvenience, if the strict letter of the regulation were to be carried out;

2. That the conditions upon which the petition for Variation is based would not be applicable generally to other property within the same zoning district;

3. That the purpose of the Variation is not based exclusively upon a desire to make more money out of the property;

4. That the alleged difficulty or particular hardship has not been created by any person presently having an interest in the property or by the applicant;

5. That the granting of the Variation will not be detrimental to the public welfare or injurious to other property or improvements in the neighborhood in which the property is located;

6. That the proposed Variation will not:

   a. Impair an adequate supply of light and air to adjacent property;

   b. Substantially increase the hazard from fire or other dangers to said property or adjacent property;

   c. Otherwise impair the public health, safety, comfort, morals or general welfare of the inhabitants of the Village;

   d. Diminish or impair property values within the neighborhood;

   e. Unduly increase traffic congestion in the public streets and highways;

   f. Create a nuisance; or

   g. Result in an increase in public expenditures;

7. That the Variation is the minimum Variation that will make possible the reasonable use of the land, building or structure;

8. In the case of a Planned Unit Development, that the granting of the Variation will not significantly compromise the character and concept of the Planned Unit Development;[2]

(E) No Variation from the provisions of Chapter 6 - Flood Hazard Land Use Regulations of this Zoning Code shall be recommended or granted unless the evidence presented at the public hearing establishes the following facts in addition to those facts required for any other Variation:

1. For a Variation from the requirements of this Zoning Code that would result in a structure not being protected to the elevation of the base flood that:

   a. The structure is to be located on a lot contiguous to and surrounded by lots with existing structures constructed below the base flood level;

   b. The applicant has acknowledged that such construction below the base flood level will increase the risks to life and property and that the applicant proceeds with knowledge of these risks; and

   c. Any Variation is contingent upon the applicant obtaining approval from other agencies having jurisdiction, when the Variance violates the requirements of such agencies;

2. For a Variation from the requirements of this Zoning Code that would significantly impede or increase the flow and passage of flood waters that:

   a. The use will not result in an increased flood height greater than 0.1 feet within the designated regulatory floodway;

   b. The resulting increase in the base flood elevation will not affect any existing structures or utilities;

   c. The owners of the properties affected by the increased base flood elevation are compensated for the resulting effect on property values, and they give their written agreement to granting the Variation; and

   d. The resulting increased flood elevations will not affect any flood protection structures;

(F) The Zoning Board of Appeals is not required to recommend for approval the full Variation requested, but the Zoning Board of Appeals may recommend and the Village Board may approve a Variation of less extent than that contained in the request;

(G) The Zoning Board of Appeals may recommend and the Village Board may require such conditions and restrictions upon the premises benefited by a Variation as may be necessary in their opinion to comply with the standards set forth in this Section, to reduce or minimize injurious effect of such Variation upon

16. Consider the desirability of annexing nearby commercial and business areas, as well as vacant and underutilized properties with commercial development potential.
17. Discourage additional "strip" commercial development within the Village.
18. Encourage the combination and consolidation of small commercial lots to enhance opportunities for coordinated improvements and new developments.
19. Enhance the high-speed communications capacity available to businesses within the community, including fiber optic connections.
20. Promote Glen Ellyn as a desirable, highly accessible and viable location for new commercial property investment and development.
21. Ensure that adequate stormwater management provisions are included in all new commercial developments.

Policies and guidelines related to "commercial areas" are presented on pages 18 and 19, as well as in the *Target Area Plans* (page 39).

## TRANSPORTATION

### Goal:

*A balanced transportation system that provides for safe and efficient movement of vehicles and pedestrians, reinforces surrounding development patterns, and enhances regional transportation facilities.*

### Objectives:

1. Use traffic calming and other techniques to minimize localized traffic congestion, address safety and operational problems, and reduce neighborhood traffic speeds within the community.
2. Minimize non-local and commercial traffic within residential neighborhoods.
3. Address the traffic delays, noise impacts and safety concerns caused by rail traffic within the Downtown.
4. Promote an improvement program for Route 53 that complements adjacent land development, enhances the Village's image and character, and is safe and convenient for bicyclists and pedestrians as well as motorists.
5. Maintain and improve the condition of street surfaces throughout the Village.
6. Encourage the provision of adequate parking for all activity areas.
7. Create a comprehensive system of bicycle facilities and pedestrian walkways which enables safe and convenient movement within the Village and connects with nearby regional systems and facilities.
8. Promote convenient public transportation services within the Village, and between the Village and other nearby communities and destinations.
9. Promote continued improvement and enhancement of the Metra commuter station as an important community asset.

Policies and guidelines related to "transportation" are presented on pages 32 and 33, as well as in the *Target Area Plans* (page 39).

## COMMUNITY FACILITIES

### Goal:

*A system of community facilities that provides for the efficient and effective delivery of public services and enhances the Village as a desirable place in which to live and do business.*

### Objectives:

1. Maintain effective fire and police protection throughout the Village.
2. Cooperate with the various public and private schools and districts to maintain adequate school sites and facilities within the Village.
3. Maintain the Library as an important focal point and resource for the community.
4. Provide adequate water supply, water distribution and sanitary sewer systems throughout the Village.
5. Improve stormwater management and upgrade storm sewer facilities throughout the Village.
6. Encourage the development of consolidated stormwater management facilities to address area-wide impacts.
7. Ensure effective stormwater management so that new residential and non-residential development does not adversely impact adjacent or nearby properties.

8. Maintain adequate sites and facilities for all Village services; undertake expansion and replacement programs as necessary.
9. Promote the re-use of surplus or outdated public buildings for new uses that benefit the community as a whole.
10. Ensure that all community facility sites and buildings are sound, attractively maintained and compatible with surrounding neighborhoods and development areas.
11. Develop a program for burying overhead cables and utility lines within the Village.
12. Provide special facilities and services for teens, senior citizens, the handicapped and other special needs groups.
13. Cooperate with and support the College of DuPage as a major community amenity and attraction.
14. Consider the need for and desirability of new community facilities that will serve the needs and desires of local residents and businesses.
15. Emphasize facilities, services and programs at locations that serve the entire community and can bring together and unite residents from all of the Village's neighborhood areas.

Policies and guidelines related to "community facilities" are presented on pages 30 and 31; policies and guidelines related to "public utilities" are presented on pages 34 and 35.

## PARKS, RECREATION and OPEN SPACE

**Goal:**

*A park and open-space system that meets the recreational and leisure needs of Village residents, and enhances the overall image and character of the community.*

**Objectives:**

1. Promote continued cooperation between the Village and the various park and school districts in the provision of recreational programs and facilities.
2. Encourage a local park system that complements the regional recreational and open space opportunities located within and near the Village.
3. Provide and encourage recreational facilities and programs that respond to the needs of Village residents.
4. Improve and expand programs, facilities and services for teens.
5. Continue to upgrade existing parks and recreational facilities; undertake improvement and replacement programs as required.
6. Encourage the provision of new open spaces throughout the community, particularly in neighborhoods with current open space deficiencies.
7. Promote new plazas and other public open spaces within Downtown and other commercial and business areas.
8. Explore the open space potential of vacant lots and other underused parcels.
9. Preserve the environmental corridor adjoining the East Branch of the DuPage River for aesthetic and recreational purposes, wildlife habitat and flood plain protection.
10. Encourage that sites for future parks or green spaces are provided as a part of any large-scale new residential developments.
11. Continue to preserve significant natural environmental and open space resources throughout the Village.
12. Undertake more extensive landscaping and "greening" programs along major street corridors, and consider these corridors integral parts of the local open space system.
13. Expand, upgrade and promote the use of pedestrian and bicycle paths to provide access to and connections between schools, parks, forest preserves, the Downtown and other key activity areas.
14. Ensure that all parks and open spaces are adequately and attractively maintained and that reforestation is undertaken as required.

Policies and guidelines related to "parks and recreation" are presented on pages 30 and 31.

# Community Wide Plan

The Community-Wide Plan consists of three components: 1) land-use, 2) transportation, and 3) community facilities.

Community-wide recommendations are briefly highlighted below and in Figure 2. More specific policies and recommendations for each component are presented on the pages that follow.

The Community-Wide Plan is supplemented by more detailed recommendations for Glen Ellyn's three "target areas," which are presented in Section 3 of this Plan report. The Target Areas include: a) Downtown Glen Ellyn, b) the Roosevelt Road corridor, and c) Five Corners.

### Overview of the Plan:

Glen Ellyn's 1986 Comprehensive Plan focused on the development opportunities afforded by a number of vacant properties scattered throughout the planning jurisdiction.

Most of the vacant sites highlighted in the 1986 Plan have been developed and Glen Ellyn is now essentially a built-up community.

Even though the Community-Wide Plan also addresses the future use of vacant and underutilized land, it has a somewhat different focus from the 1986 Plan. The new Plan focuses on the unique needs of a "mature" community. It strives to maintain and enhance the traditional form, character and distinguishing features of Glen Ellyn, while still promoting high-quality and compatible improvements and new developments in selected locations.

In particular, the new Plan strives to ensure that all replacement, reconstruction and redevelopment—which are essential if a mature, established community is to remain strong and viable—are compatible with, complement and enhance the existing image and character of the Village.

### Land Use:

The Community-Wide Plan provides a guide for future land-use and development within the Village. It identifies which lands should be devoted to residential, commercial and public land uses. It also describes how various land-use areas are to be related and interconnected, and highlights the types of projects and improvements to be undertaken within each area.

Even though Glen Ellyn is primarily a built-up community, there will continue to be demand for a modest amount of new residential, commercial and office development in the future. New development will entail replacement of older existing uses, the redevelopment of marginal and deteriorated properties, and the development of remaining vacant land. In addition, future growth could entail the annexation of currently unincorporated lands, although most of these properties are also developed.

The Plan builds upon the existing land use structure of Glen Ellyn. It strives to reinforce and strengthen the traditional residential character of the community. Single-family residential development should continue to predominate, and the distinctive qualities and characteristics of individual neighborhoods should be enhanced. The current balance of single-family and multi-family housing (which is approximately 60% - 40%) should be maintained.

Commercial uses should continue to be located primarily within Downtown Glen Ellyn, along Roosevelt Road, in the Five Corners area, and along Butterfield Road and North Avenue. Existing commercial areas should be improved and upgraded, and compatible new investment and development should be promoted. Improvements should be made to existing buildings, parking lots and the public rights-of-way.

While Glen Ellyn's planning jurisdiction will continue to have only a limited amount of industrial development, compatible new light industry and "high-tech" uses should be considered within designated business areas.

### Transportation:

While Glen Ellyn's roadway system is essentially in place, operational improvements should be undertaken to meet the needs of future development and to preserve and protect the integrity of existing neighborhoods.

The safe and convenient use of transportation corridors by pedestrians, cyclists, public transit and private vehicles should be emphasized. Traffic flow and traffic safety should be improved along key routes without disrupting or adversely impacting adjacent land development or overall community character.

Landscaping and other improvements should be undertaken to enhance the appearance of major roadways.

Adequate parking should be provided to accommodate the needs of Downtown and other commercial areas, with a balance of short-term parking to serve commercial and business patrons and long-term parking to serve employees and commuters.

### Community Facilities:

The Village should continue to offer its residents and businesses top quality community facilities and services.

The local parks and recreation system should be enhanced as an important community asset. Existing parks should be improved and upgraded as required. Additional cooperative agreements should be established between the Park Districts, the School Districts and other organizations to enhance the recreational opportunities available to local residents.

The Village should cooperate with public and private schools to ensure that high-quality educational facilities continue to be available. Existing school sites and buildings should be improved and upgraded as required.

Other community facilities, including the Library, the YMCA, fire and police stations, the Civic Center, public works facilities and the College of DuPage, should be improved and enhanced as necessary, and should continue to be important assets of the community.

The Village should continue to upgrade public utilities in order to maintain quality service in the future. Storm water management facilities should be expanded as planned to reduce the adverse impacts of storm water runoff within the community.

# Community Facilities Policies

In general, Glen Ellyn is well served by community facilities and no major new public building projects are anticipated during the next few years. The emphasis in the immediate future should be on improving and enhancing existing sites and buildings, and on undertaking upgrades, replacements and expansions as required.

The Village should continue to promote cooperation, interaction and collaboration among the various agencies and organizations that serve Glen Ellyn, including School Districts, Park Districts, the College, the Forest Preserve District, DuPage County, and others.

### Improvement Guidelines:

All community facilities within Glen Ellyn should be well-maintained and repairs should be undertaken as required. If facilities become inadequate or obsolete, they should be updated or replaced. If existing public buildings are closed, reuse of these facilities for new activities that are of benefit to the community should be considered.

Community facilities should be compatible with surrounding uses and should enhance the character of the neighborhoods in which they are located. Sites should be attractively landscaped, and screening and buffering should be provided if necessary. Traffic generated by community facilities should not adversely impact surrounding areas. Adequate off-street parking should be available at all community facility sites.

The Village should be attuned to the changing needs and requirements of local residents and businesses, and new facilities and services should be provided if they become necessary or desirable in the future.

New public facilities should be viewed as opportunities to create new civic landmarks within Glen Ellyn. Where possible, new facilities should be located, designed and developed as focal points and "signature" projects within the Village.

### Public & Private Schools:

Conditions within all of the school districts serving Glen Ellyn are similar. All districts have been experiencing slight, steady increases in enrollment during the past few years, and this is expected to continue in the immediate future. Some private schools have waiting lists.

Existing school facilities are in good condition, although some are becoming old and periodic improvements will be required. Several schools have a shortage of land for outdoor recreation and off-street parking, and some experience traffic congestion during pick-up/drop-off periods.

The Plan encourages continued cooperation and collaboration between the Village and the public and private schools in exploring opportunities for enhancing school sites and buildings and in addressing mutual concerns.

### Parks and Open Spaces:

In order to maintain Glen Ellyn's tradition as a strong and desirable residential community, the Village should support improvement and enhancement of the parks and open space system.

There should be continued cooperation between the Village, the Park Districts, the School Districts and various regional agencies in the provision of recreational facilities. Sites and facilities should be shared, and programs and services should be coordinated to the extent possible.

Since Glen Ellyn is a built-up community, the existing park system should be used efficiently and effectively. Existing park sites should be developed more intensively. New facilities should be developed on existing sites. Older facilities should be upgraded or replaced. Program offerings should be expanded, particularly for teens. Sites should be attractively landscaped and landscaping should be maintained and revitalized as required.

Village Links, Panfish Park and Village Green should continue to be improved and enhanced as recreational focal points within the Village.

Construction is underway on a park at the Maryknoll property. The Village and Park Districts should explore the possibility for acquiring additional new open space sites in the southern portion of the planning jurisdiction. Several vacant lots indicated in the Plan as single-family residential could be retained as public open spaces, depending upon ownership, development interest, and neighborhood needs and desires.

The recreational potential of the East Branch of the DuPage River should be more fully captured. While this corridor should remain essentially undeveloped, it does provide an attractive greenway that extends through the Village's planning jurisdiction from Churchill Woods to the Morton Arboretum. It should be improved for environmental education, passive recreation, and as a multi-use trail.

The Village should continue to acquire or otherwise preserve floodplain areas. While development of these areas should not be permitted, they may represent opportunities for new public open spaces.

Other land areas characterized by poor soils, drainage problems or other conditions that render them unsuitable for building construction should also be considered for open space use.

### Other Community Facilities:

Other public sites and buildings, including fire and police facilities, the Civic Center, the Library, and the two Post Offices, are in good condition and should be adequate to serve the community in the immediate future.

The Village should consider the need to upgrade or expand Reno Center, located on Lambert Road south of Roosevelt Road, to better accommodate public works buildings, storage areas, off-street parking and other operations.

Interior remodeling is now underway at the YMCA, located on Lambert Road just north of Roosevelt Road, and exterior expansion is also being considered for this facility.

The College of DuPage should continue to be recognized as a major asset within Glen Ellyn, and the Village should continue to work with the College to address issues of mutual concern.

*Figure 7*

# Community Facilities Policies

Glen Ellyn has traditionally been known for its quality community facilities and services. Community facilities provide important focal points for neighborhood life and activity, and contribute significantly to the overall quality of life within the Village. The Community-Wide Plan presents guidelines for maintaining and enhancing parks, schools, public buildings and other community facilities. The Village should recognize and market these facilities as important assets that can help attract new families and businesses to the community.

**Map Legend:**

- Improve and enhance the local park and open space system.
- Protect forest preserves and nature conservancies as important open space assets.
- Cooperate with and support public and private schools.
- Continue to enhance the College of DuPage as a major community focal point.
- Maintain and improve governmental sites and buildings as required.
- Maintain and improve utility facilities as required.
- Work with and support local churches and service organizations.
- Existing Bicycle Trails.
- Proposed Bicycle Trails.

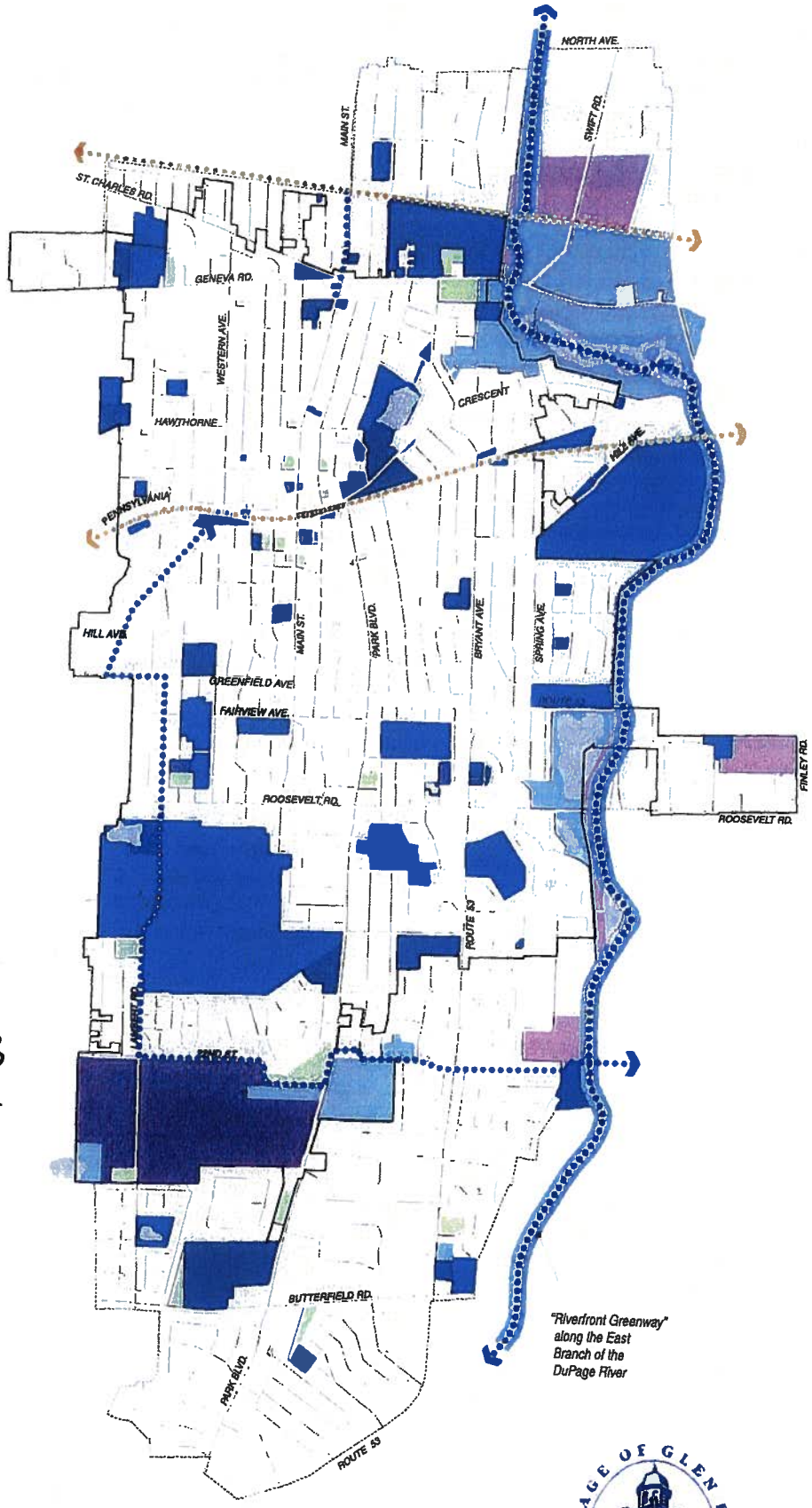

# Existing Schools

## General Conditions:

Glen Ellyn is served by three public elementary school districts, one high school district and several parochial and special-purpose school facilities.

All of the public and parochial school districts share several common conditions. After several years of declining enrollments, all districts have been experiencing increases during the past few years, a trend which is expected to continue in the near future. All existing school facilities within the Village are in good condition, although some are becoming old and will require periodic improvements. None of the districts foresees the need for new school sites during the next 5 to 10 years, unless major new housing construction occurs.

***School District 41*** serves the northern portion of Glen Ellyn, generally north of Roosevelt Road. The district operates four elementary schools (Abraham Lincoln, Benjamin Franklin, Churchill and Forest Glen) and one junior high school (Hadley), all of which are located in Glen Ellyn. While all schools have been renovated during the past few years, renovation and repair is needed at the Administration Center. Several of the schools have a shortage of space for outdoor recreation and off-street parking, and some experience traffic congestion during pick-up/drop-off periods. It should be noted that SD # 41 retained control of the former Spalding School property in the event that new development in the northern portion of the district warrants a new school facility in the future.

***School District 89*** serves the southern portion of Glen Ellyn, generally south of Roosevelt Road. The district operates four elementary schools (Arbor View, Briar Glen, Park View and Westfield) and one junior high school (Glen Crest), all of which are located in Glen Ellyn except for Briar Glen. All school facilities are considered to be in good condition and no major renovations or additions are anticipated for the immediate future. A couple of the schools would benefit from additional outdoor recreational land and/or off-street parking.

***School District 44***, which is primarily a Lombard District, serves the portion of Glen Ellyn north of Roosevelt Road and east of I-355. Students in Glen Ellyn attend Madison Elementary and Glenn Westlake Middle School, both located in Lombard. SD # 44 is completing several building renovations and additions, which should meet near-term needs within the district.

***High School District 87*** operates two high schools in Glen Ellyn, Glenbard West and Glenbard South. Several additions and renovations are in progress which should accommodate the district's anticipated enrollment growth. Glenbard West is an older facility constructed in the 1920s with numerous additions and renovations. While the facility is in adequate condition and is an important community landmark, it is very near capacity and has limited land available for outdoor recreation and off-street parking. District 87 administrative offices are located in the former library building at Park and Crescent Boulevards.

***St. Petronille School*** serves students residing primarily north of Roosevelt Road. Enrollment has been increasing and the school is now at capacity with a waiting list for primary grades. While some renovation was completed in 1998, additional work is scheduled, including demolition of the Rectory and construction of a new Parish Center.

***St. James the Apostle School*** serves students residing primarily south of Roosevelt Road. Enrollment has been increasing, the school is near capacity, and many of the classes have a waiting list. While the church is undergoing a major expansion program at present, additional work may be needed on the school facility in the near future.

***Philip J. Rock Center and School*** was created by a special legislative enactment in the State legislature and it receives funding from the State of Illinois. It is a residential center for deaf or blind individuals with one or more handicaps. The school was constructed in the early 1960's and is in good condition with no plans for major renovations or expansions.

The ***College of DuPage***, which occupies a 265-acre campus in the southern portion of Glen Ellyn, is a two-year "commuter college" serving all of DuPage County. Current enrollment at the Glen Ellyn campus is 7,500 full-time and 18,000 part-time students. While enrollment fluctuates with the economy, officials do not anticipate major changes in the near future.

Recent facility improvements include a new computing center and additions to the Student Resource Center. The College is currently updating its Facilities Master Plan, which will most likely call for replacement of some original campus buildings and a reallocation of certain uses and activities.

Because of its size and the facilities and services it offers, many of which are available to local residents, the College is a major focal point within Glen Ellyn. Of special note is the McAninich Arts Center, which represents a unique community asset.

Ancel Glink
Diamond Bush DiGianni & Kraftheefer

A Professional Corporation
140 South Dearborn Street, Suite 600
Chicago, IL 60603
www.ancelglink.com

Julie A. Tappendorf
jtappendorf@ancelglink.com
(P) 312.604.9182
(F) 312.782.0943

# MEMORANDUM

**To:** Glen Ellyn Plan Commission

**CC:** Village Planner Michele Stegall

**From:** Julie A. Tappendorf

**Subject:** Memorial Field – School District Application ("Disclaimer Language")

**Date:** August 16, 2011

---

School District #87 recently submitted an application for zoning relief to allow the installation and improvement of Memorial Field located at Glenbard West High School. These improvements include field lighting, a sideline sidewalk and ramp, bleachers, a masonry fence, and renovations to the batting cages ("***Memorial Field Project***"). These improvements require a number of variations from the Zoning Code, as detailed in the zoning application and supplemental materials submitted by the District and dated July 25, 2011. ("***Application***").

The Application contains the following paragraph on page 5:

> In the spirit of intergovernmental cooperation, the School District submits this application for review and consideration by the Village. The School District reserves its authority, to the fullest extent permitted by law, to improve Memorial Field as necessary to meet its program needs, should the variance process or result unduly restrict the District from meeting such needs. The School District, however, believes it is in the best interest of the taxpayers of both public bodies to work cooperatively on these variance issues.

In a previous zoning application, the District had included the same, or similar, language about which the Plan Commission raised concerns. Specifically, there were questions as to how the District's "disclaimer" would impact the Village's consideration of the zoning application submitted by the District.

We understand that the District takes the position that it is not subject to municipal zoning and building jurisdiction. With respect to building jurisdiction, we agree with the District – public schools are subject to the Illinois School Code, which has established its own building code for school buildings that preempts local building regulations. However, neither the Illinois Municipal Code nor the Illinois School Code provide school districts with immunity from the

zoning ordinances of their host municipality. In a similar fact situation involving the installation of lights at a park, the Illinois Supreme Court held that park districts are not immune from local zoning regulations. *Wilmette Park Dist. v. Village of Wilmette*, 112 Ill.2d 6 (1986). It is certainly reasonable to expect this decision and holding to be extended to school districts, if a similar challenge were brought.

It is our opinion that the District's "disclaimer" language has no legal impact on the Village's zoning authority over the District, including its authority to require, review, consider, make recommendations, and take final action on the District's Application for variations for the Memorial Field Project. As I explained to one of the District's attorneys, it is our position that as an owner of property located within Glen Ellyn's corporate boundaries, the District is subject to the Village's zoning jurisdiction and the Zoning Code. Consequently, if a proposed improvement or project does not conform to the Village's zoning regulations, then the District, as any other property owner, would be required to apply for and obtain the necessary zoning relief to allow the improvement or project.

Consistent with this position, Village staff conducted a zoning review of the Memorial Field Project and informed the District that the Project, as proposed, would require a number of variations from various provisions of the Zoning Code. The District subsequently submitted the Application requesting approval of these variations. The Village published notice of a public hearing for August 25, 2011. The Plan Commission will conduct the public hearing and make recommendations to the Village Board for final action. In other words, the District's Application should be processed, reviewed, and decided in the same manner as any other zoning application.

Julie will be available at the August 25, 2011 public hearing to answer any questions about this memorandum.

**JAMES J. BENES AND ASSOCIATES, INC.**
950 Warrenville Road ▪ Suite 101 ▪ Lisle, Illinois ▪ 60532
Tel. (630) 719-7570 ▪ Fax (630) 719-7589

# MEMORANDUM

Date: July 25, 2011

To: Michele Stegall
Village Planner
Village of Glen Ellyn

From: James E. Darnell, PE, CFM
Vice President

Re: Memorial Field Lighting Phase II
Crescent Boulevard at Park Row
Job No. 1115.023

---

At your request we have reviewed the Zoning Variations request and revised application which includes the following items:

1. Photometric Site Plans (7 sheets), prepared by Musco Lighting of Oskaloosa, Iowa, and dated July 18, 2011.

Glenbard Township High School District 87 recently constructed a synthetic turf surface at Memorial Field, located on the Glenbard West Campus. As part of the campus master plan, additional enhancements to Memorial Field are being proposed in order to increase utilization of the facility. Among the proposed enhancements is the installation of field lighting to extend the hours of usage while providing a safe environment for the athletes. The proposed enhancements will lessen the need to bus student athletes to off-site facilities. We offer the following comments related to the proposed field lighting:

**Existing Conditions** Memorial Field is located on the southeast side of Crescent Boulevard, southwest of Park Row, and across the street from Glenbard West High School. The east portion of the site is currently occupied by tennis courts, an office & garage building, a small parking lot, a stormwater detention pond, and a basketball court. The west portion of the site is vacant and undeveloped. The central portion of the site is occupied by a synthetic turf athletic field, a softball field with a dirt infield, and dugouts. The surface of the athletic field is approximately three feet lower than the Crescent Avenue pavement and is also lower than the railroad tracks to the south.

**Proposed Lighting** The Illuminating Engineering Society of North America (IESNA), in their Technical Report RP-33, Lighting for Exterior Environments, states that when sports fields are adjacent to roadways, the sports lighting should not contribute glare onto the roadways. When sports fields are located adjacent to residential areas, the overall brightness should be carefully controlled. Poles should be at least 70 feet high for aerial

sports, such as baseball or softball. Floodlights should not be aimed above 62 degrees and should use internal louvers and external shields to help minimize light pollution.

The lighting system has been designed to illuminate both the football / soccer field and the softball field, and includes six light poles with a total of 35 luminaires. The luminaires are 1500 watt metal halide fixtures and are provided with a spill & glare light control visor. The proposed Musco lights are energy efficient and the energy cost to light the fields is estimated to be less than $5 per hour. The proposed lighting system addresses the above recommendations of IESNA RP-33.

**Hours of Operation** It is District 87's intent to require all athletic activity to conclude by 9:00 pm, with authorization to keep the lights on until 9:30 pm. This policy would be in force Monday through Saturday. Field lighting will not be permitted on Sundays. Generally, the lights will be turned on one half hour before dusk and will remain on until 9:30 pm. Therefore, the hours of operation will vary with the calendar. In the middle of November, the lights will operate from 4:15 pm to 9:30 pm, or 5h-15m per day. At the end of June and beginning of July, the lights would not be turned on until 8:00 pm, so they will be operating only 1h-30m per day. There will be no light usage on Sundays. The tables in Exhibit A of the previously submitted documents give more detail regarding hours of operation and anticipated field activities for specific weeks during the calendar year.

**Lighting Levels for Football & Soccer Fields** The industry standard average illumination for football and soccer fields varies. IESNA Technical Report RP-6 recommends the following:

- Class I Competition – 5,000 to 10,000 spectators 100 f/c football / 75 f/c soccer
- Class II Competition – up to 5,000 spectators 50 f/c football / 50 f/c soccer
- Class III Competition – some spectators 30 f/c football / 30 f/c soccer
- Class IV Recreational – no spectators 20 f/c football / 20 f/c soccer

For this application, Class III lighting is appropriate. As the softball outfield overlaps the football / soccer field, it is unlikely they will be used simultaneously. There is no need to light the softball field when the football / soccer field is in use, so the calculations are based on only 29 of the 35 luminaires being on. The proposed lighting for the football and soccer field provides an average illumination of 32.7 f/c, which closely matches the Class III recommendations.

**Lighting Levels for Softball Fields** Back in the 1980s and 1990s, the standard average illumination for softball fields varied from 10 f/c infield & 7 f/c outfield for recreational use, up to 50 f/c infield & 30 f/c outfield for professional play. Since that time, recommended lighting levels have increased. IESNA Technical Report RP-6 now recommends the following:

- Class I Competition – 5,000 to 10,000 spectators 150 f/c infield / 100 f/c outfield
- Class II Competition – up to 5,000 spectators 100 f/c infield / 70 f/c outfield
- Class III Competition – some spectators 50 f/c infield / 30 f/c outfield
- Class IV Recreational – no spectators 30 f/c infield / 20 f/c outfield

For this application, Class III lighting is appropriate. There is no need to light the football / soccer field when the softball field is in use, so the calculations are based on only 28 of the 35 luminaires being on. The proposed lighting for the softball field provides an average illumination of 50.4 f/c for the infield and 33.8 f/c for the outfield, which closely matches the Class III recommendations.

**Impacts to Vehicular Traffic on Crescent Boulevard** The proposed sports lighting should be designed so that excessive light does not spill over onto the pavement. It is important to maintain uniformity along the roadway so that drivers do not need to traverse "hot" spots. As a drivers enter a brightly lit area, their eyes take time to adjust to the higher lighting level. As they pass the brightly lit area, their eyes will take even longer to adjust back to the normal lighting level. This is especially undesirable where a high level of pedestrian traffic is anticipated, such as near a sporting event. The proximity of Crescent Boulevard to the well-lit athletic fields was thus a concern. By using internal louvers and external shields, the proposed light fixtures are able to place the required illumination on the field while greatly reducing light trespass onto the street.

The existing streetlights on Crescent Boulevard are located on the northwest side of the street only. We inspected the street after dark and measured the existing illumination on the pavement with a light meter. We found that the existing lighting level varied from 0.0 to 1.1 f/c along the northwest edge of pavement, from 0.0 to 0.8 f/c along the centerline, and from 0.0 to 0.3 f/c along the southeast edge of pavement. The average illumination is 0.19 f/c, which is substantially less than the 0.9 to 1.2 f/c normally recommended for a street like this. The lighting levels would be a bit brighter if several low tree limbs were pruned, but the southeast edge of pavement would still be relatively dark.

Fortunately, the light spill from the athletic fields will be brightest along the southeast edge of pavement, complementing the existing lighting. The submitted photometric calculations are based on all 35 luminaires being on, and show that the light spill will vary from 0.1 to 0.4 f/c along the northwest edge of pavement, from 0.2 to 0.7 f/c along the centerline, and from 0.5 to 2.6 f/c along the southeast edge of pavement. The average illumination is 0.75 f/c. Attached is a spreadsheet created to add the existing lighting to the proposed spill light. The total illumination on the pavement, with all athletic lighting turned on, will vary from 0.3 to 1.4 f/c along the northwest edge of pavement, from 0.3 to 1.3 f/c along the centerline, and from 0.6 to 2.6 f/c along the southeast edge of pavement. The average illumination will be 0.95 f/c, which is close to the recommended 0.9 to 1.2 f/c. The average to minimum uniformity ratio is only 2.0 to 2.2, so the bright spot along the southeast edge of pavement should not cause ocular discomfort. The light spill from the proposed athletic field lighting will bring the illumination levels on the pavement up to a recommended level while the potential for pedestrian crossings is highest, and will not have a negative impact on passing motorists.

**Impacts to Neighbors** The closest residential properties to Memorial Field are the single-family homes on the other side of Park Row (400 feet from the football / soccer field), apartment buildings on the south side of the railroad tracks and the Illinois Prairie Path (250

feet from the softball field), and single-family homes southwest of the apartments (the nearest one 260 feet from the football / soccer field). The photometric plan in the submittal shows that the illumination along the Park Row right-of-way will be zero. The bright spot along the south property line will be 8.5 f/c, but the illumination along the south railroad track will be 0.3 f/c or less, dropping to 0.1 f/c on the south side of the Illinois Prairie Path. Illumination provided by the existing light poles along the Prairie Path is unknown. While the nearby residents may perceive the lighting on Memorial Field to be bright, the illumination will be focused and stray light trespass will be kept to a minimum. It does not appear that the proposed lighting system will provide any measurable illumination on any residential properties.

**Existing Tennis Court Lighting** The existing tennis courts are currently illuminated by multiple floodlights on nine 30-foot high poles. The submittal states that the lights were installed by the park district when the tennis courts were constructed; and that these lights have no shielding. It also states that there are currently no restrictions on the time when the lights may be used. It is our understanding that District 87 is willing to meet with the Village at a future time to discuss retrofitting the existing lights and restricting the hours of usage to the same hours as the other athletic fields on the property.

While we do not have photometric information for the existing tennis court lighting, we estimate that their contribution to light levels on the new athletic fields will be negligible. They may add 0.1 to 0.3 f/c at the east end of the fields, but the property lines to the northwest (Crescent Boulevard) and southeast (the railroad tracks) of the new fields are too far away, and the impact of the tennis court lights at those locations will be zero.

**Requested Variances** Installation of the proposed field lighting will require three variances from the Village Code. The specific variance requests and their locations are outlined in Exhibit C of the previously submitted report. The brightest spot along the north property line, with all 35 luminaires turned on, will be 7.32 f/c at the property line and 5.43 f/c five feet past the property line. The brightest spot along the south property line, with all 35 luminaires turned on, will be 8.49 f/c at the property line and 6.14 f/c five feet past the property line. These variances are required in order to meet the illumination levels and uniformity ratios which are recommended for lighting athletic fields.

Please contact us if you have any questions or require additional information.

-- end --

***Proposed Memorial Field Lighting***
***Glenbard West High School***

James J. Benes & Associates, Inc.
August 15, 2011

| ***Light Pole*** | ***Height (ft)*** | ***Location*** | ***No. of Lamps*** | ***During Softball Games*** | ***During Football / Soccer Games*** |
|---|---|---|---|---|---|
| A1 | 60 | About 5' from the south property line, between home plate and 3rd base | 3 | 3 | |
| A2 | 60 | About 55' from the south property line, between home plate and 1st base | 3 | 3 | |
| B1 | 70 | About 23' from the south property line, in line with the left outfield foul pole | 8 | 8 | 8 |
| B2 | 70 | About 155' from the south property line, in line with the right outfield foul pole | 7 | 7 | 7 |
| C1 | 70 | On the south side of Crescent Blvd, in line with the southwest 15-yard line | 7 | | 7 |
| C2 | 70 | On the south side of Crescent Blvd, in line with the northeast 15-yard line | 7 | 7 | 7 |
| | | | | | |
| | | ***Total Lamps*** | ***35*** | ***28*** | ***29*** |

**Village Of Glen Ellyn**

---

**Ordinance No. 5888**

**An Ordinance Approving Zoning Variations**
**for Memorial Park located at 671 Crescent Boulevard**
**to Allow the Construction of New Dugouts, Sidewalks, Concrete Pads and Stairs**
**Glen Ellyn, Illinois 60137**

---

**Adopted by the**
**President and the Board of Trustees**
**of the Village of Glen Ellyn**
**DuPage County, Illinois**
**This 27th Day of September, 2010.**

---

Published in pamphlet form by the authority of the President and Board of Trustees of the Village of Glen Ellyn, DuPage County, Illinois, this 28th day of September, 2010.

**Ordinance No. 5888**

**An Ordinance Approving Zoning Variations for Memorial Park located at 671 Crescent Boulevard to Allow the Construction of New Dugouts, Sidewalks, Concrete Pads and Stairs Glen Ellyn, Illinois 60137**

**Whereas,** Glenbard High School District 87, owner of Memorial Park located on property commonly known as 671 Crescent Boulevard, is requesting approval of the following variations from the Glen Ellyn Zoning Code:

A. A variation from Section 10-5-4(A)4 to allow a dugout to be constructed 9.8 feet from the southern property line adjacent to the Union Pacific railroad in lieu of the minimum required accessory structure setback of 30.5 feet;

B. A variation from Section 10-5-4(A)2 to allow a combined area of 1,067 square feet of freestanding accessory structures on the property in lieu of the maximum area of 1,000 square feet permitted;

C. A variation from Section 10-5-4(A)3 to allow more than one of each type of accessory building to be located on the property to accommodate the construction of two dugouts; and

D. A variation from Section 10-5-5(C) to allow an impervious surface setback of as little as 0 feet in lieu of the minimum setback of 30.5 feet required to accommodate new pavers leading from Crescent Boulevard onto the site, a new sidewalk 8.5 feet from the Crescent Boulevard right-of-way and concrete pads to accommodate bleachers, a dugout and stairs; and

**Whereas,** the above variations are being requested to allow improvements at Memorial Park including new dugouts, sidewalks, pavers, concrete pads and stairs; and

**Whereas,** the subject property is bounded by Crescent Boulevard to the north, the Union Pacific railroad to the south, Park Row to the East and Park Boulevard to the west, in the CR Conservation Recreation zoning district and is legally described as follows:

PARCEL ONE:
LOT 17 IN COUNTY CLERK'S THIRD ASSESSMENT DIVISION IN SECTION 11, TOWNSHIP 39 NORTH, RANGE 10 EAST OF THE THIRD PRINCIPAL MERIDIAN, ACCORDING O THE PLAT THEREOF RECORDED JULY 3, 1906 AS DOCUMENT NUMBER 88053, IN DUPAGE COUNTY, ILLINOIS.

PARCEL TWO:
BLOCK 6 IN WOODTHORP, BEING A SUBDIVISION IN THE SOUTHEAST QUARTER OF SECTION 11, TOWNSHIP 39 NORTH, RANGE 10 EAST OF THE THIRD PRINCIPAL MERIDIAN, ACCORDING TO THE PLAT THEREOF RECORDED JUNE 2, 1926 AS DOCUMENT NUMBER 214660, IN DUPAGE COUNTY, ILLINOIS.

P.I.N.: 05-11-410-014; and

**Whereas,** following due and proper publication of notice in the Daily Herald not less than fifteen (15) nor more than thirty (30) days prior thereto, and following written notice to all property owners within 250 feet, and following the placement of a placard on the subject property not less than fifteen (15) days prior thereto, the Plan Commission of the Village of Glen Ellyn conducted a public hearing on September 9, 2010, at which hearing the Plan Commission considered the requested Zoning Variations and one person spoke in opposition to the requests and one person asked a general question; and

**Whereas,** after having considered the evidence presented, including the exhibits and materials submitted, the Plan Commission made its findings of fact and recommendations as set forth in the minutes of the Glen Ellyn Plan Commission dated September 9, 2010, a draft of which is attached hereto as Exhibit "A", and by a vote of nine (9) "yes" and one (1) "no," recommended approval of the requested Zoning Variations pursuant to Sections 10-10-12 of the Glen Ellyn Zoning Code; and

**Whereas,** the Village President and Board of Trustees have reviewed the evidence, exhibits and materials presented at the September 9, 2010 public hearing before the Plan Commission and have considered the findings of fact and recommendations of the Plan Commission; and

**Whereas,** the President and Board of Trustees have determined that granting the requested Zoning Variations is consistent with the goals of the Glen Ellyn Zoning Code.

**Now, Therefore, be it Ordained by the President and Board of Trustees of the Village of Glen Ellyn, DuPage County, Illinois,** in the exercise of its home rule powers, as follows:

**Section One:** The September 9, 2010 draft minutes of the Glen Ellyn Plan Commission, Exhibit "A" attached hereto, and the findings of fact set forth therein and in the preambles above are hereby adopted as the findings of fact of the Village President and Board of Trustees based upon their review of the evidence, exhibits, and materials presented at the September 9, 2010 public hearing before the Plan Commission.

**Section Two:** Based upon the findings of fact and recommendations of the Plan Commission as adopted herein and the findings of fact and conclusions set forth in the preambles above, the Village President and Board of Trustees hereby grant approval of the requested Zoning Variations to allow improvements at Memorial Park including new dugouts, sidewalks, pavers, concrete pads and stairs.

**Section Three:** This grant of approval of the requested Zoning Variations is subject to the condition that the project is constructed and maintained in substantial conformance with the plans submitted and the testimony presented at the September 9, 2010 Plan Commission public hearing and with the petitioner's application packet stamped received August 26, 2010 including the following plans and documents as though they were attached to this Ordinance:

A. Cover Letter from Mark Zaprzalka dated August 18, 2010
B. Narrative Statement/Use Description dated August 20, 2010
C. Quantitative Summary dated August 17, 2010
D. Application for Variation signed August 20, 2010
E. Evidence Related to Zoning Code Standards for a Variation dated August 19, 2010
F. Plat of Survey/Topography prepared by Midwest Technical Consultants, Inc. dated March 8, 2010
G. Dimensional Control & Paving Plan prepared by Legat Architects revised August 19, 2010
H. Plans and Details for Dugouts prepared by Legat Architects – Sheet A2.00 (no date)

and these plans and documents shall be filed with and made part of the permanent records of the

Glen Ellyn Planning and Development Department.

**Section Four**: This grant of approval of the requested Zoning Variations shall expire and become null and void within 24 months of the date of this Ordinance unless construction of the improvements for which the requested Zoning Variations have been granted is complete, provided, however, that the Village Board, by motion, may extend the length of this approval. Further, the Village Board may, for good cause shown, waive or modify any conditions set forth in this Ordinance without requiring that the matter return for public hearing.

**Section Five**: This Ordinance shall be in full force and effect from and after the passage, approval, and publication in pamphlet form.

**Section Six**: Failure of the owners or other party in interest or a subsequent owner or other party in interest to comply with the terms of this Ordinance, after execution of such Ordinance, shall subject the owners or party in interest to the penalties set forth in Section 10-10-18 (A) and (B) of the Village of Glen Ellyn Zoning Code.

**Section Seven**. The Village Clerk is hereby authorized to record this Ordinance with the DuPage County Recorder.

**Passed** by the President and Board of Trustees of the Village of Glen Ellyn, Illinois, this 27th day of September, 20 10.

**Ayes:** Thorsell, Comerford, Cooper, Hartweg, Henninger, Ladesic

**Nays:** — 0 —

**Absent:** — 0 —

**Approved** by the Village President of the Village of Glen Ellyn, Illinois, this 27th day of September, 2010.

Village President of the
Village of Glen Ellyn, Illinois

**Attest:**

Suzanne R. Connors
Village Clerk of the
Village of Glen Ellyn, Illinois

(Published in pamphlet form and posted on the 28th day of September 2010.)

X:\Plandev\PLANNING\DEVELOPMENT PROJECTS\Crescent\Crescent 670, Glenbard West High School\Memorial Field\Ordinance.docx

EXHIBIT "A"

DRAFT
PLAN COMMISSION
MINUTES
SEPTEMBER 9, 2010

The meeting was called to order by Chairman Julie Fullerton at 7:30 p.m. Plan Commissioners Craig Bromann, Todd Buckton, Robert Friedberg, Jeff Girling, Heidi Lannen, Julie McCormick, Jay Strayer, Len Swanson and Ray Whalen were present. Plan Commissioner Linda Dykstra was excused. Also present were Trustee Liaison Michelle Thorsell, Village Planner Michele Stegall and Recording Secretary Barbara Utterback.

Commissioner Friedberg moved, seconded by Commissioner Swanson, to approve the minutes of the August 26, 2010 Plan Commission meeting. The motion carried unanimously by voice vote.

Chairman Fullerton described the Plan Commission procedure. On the agenda was a public hearing regarding zoning variations at Memorial Field.

PUBLIC HEARING – MEMORIAL FIELD
PUBLIC HEARING WITH DISCUSSION, CONSIDERATION AND RECOMMENDATION REGARDING A REQUEST BY GLENBARD HIGH SCHOOL DISTRICT #87 FOR APPROVAL OF VARIATIONS FROM THE GLEN ELLYN ZONING CODE TO ACCOMMODATE PROPOSED IMPROVEMENTS TO MEMORIAL FIELD, INCLUDING NEW DUGOUTS, SIDEWALKS, PAVERS, CONCRETE PADS AND STAIRS. THE REQUESTED ZONING VARIATIONS ARE RELATED TO ACCESSORY STRUCTURE AND IMPERVIOUS SURFACE REQUIREMENTS. NO LIGHTS ARE CURRENTLY PROPOSED. THE SUBJECT PROPERTY IS BOUNDED BY CRESCENT BOULEVARD TO THE NORTH, THE UNION PACIFIC RAILROAD TO THE SOUTH, PARK ROW TO THE EAST AND PARK BOULEVARD TO THE WEST. THE SITE IS ZONED CR CONSERVATION RECREATION ZONING DISTRICT.
*(Glenbard High School District #87, represented by project engineer Jacob and Hefner Associates)*

Chairman Fullerton announced that the issue of lights at Memorial Field will not be considered at this public hearing.

Staff Introduction

Village Planner Michele Stegall stated that Glenbard School District 87 is requesting approval of variations to accommodate the construction of new dugouts, sidewalks, pavers, concrete pads and stairs and are represented at this meeting by Jacob and Hefner, engineers. Ms. Stegall displayed an aerial photo and described the location of the subject building and the surrounding uses. The subject site is located in the CR Conservation Recreation zoning district. Ms. Stegall displayed a site plan and reviewed the requested

variations. Regarding the dugouts, the petitioner is requesting a variation to allow the third base dugout to be constructed 9.8 feet from the southern property line in lieu of the minimum required accessory structure setback of 30.5 feet (5% of the lot width); a variation to allow a combined area of 1,067 square feet of freestanding accessory structures on the property in lieu of the maximum area of 1,000 square feet permitted; a variation to allow more than one of each type of accessory building to be located on the property (two dugouts); and a variation to allow an impervious surface setback to allow the third base dugout and associated concrete pad to be located 9.8 feet from the south property line in lieu of the minimum impervious surface setback of 30.5 feet required. Ms. Stegall explained that the first base dugout is larger than the third base dugout because it is proposed to accommodate some storage of equipment and that two prior existing dugouts in approximately the same proposed locations had a combined area of about 650 square feet in size. The petitioner is also requesting an impervious surface setback of 8.7 feet to accommodate a third base bleacher pad. The bleachers would be removable. The petitioner is also requesting an impervious surface variation for a new sidewalk along Crescent Boulevard that would be located as close as 8.5 feet from the property line, and new stairs that would be 0 feet from the property line. An impervious surface variation is also being requested for a brick paver pathway 1 foot off of the property line that would lead to a donor patio west of the ball field. Ms. Stegall reviewed ADA requirements for the proposed project that had been provided by Building and Zoning Official Joe Kvapil.

In response to some Plan Commissioners' questions prior to the meeting, Ms. Stegall reviewed the Village's jurisdiction as related to zoning and the School District. To summarize, an Intergovernmental Agreement allows schools to remain as permitted uses as opposed to special uses with the condition that they hold their own public hearings. The schools must, however, comply with zoning standards and if a school project does not meet zoning standards, they must go through the normal Village public hearing process.

Petitioner's Presentation

Dr. Michael Meissen, Superintendent of Schools, Glenbard High School District 87, 596 Crescent Boulevard, Glen Ellyn, Illinois, Chris McClain, Assistant Superintendent for Business for Glenbard High School District 87, 596 Crescent Boulevard, Glen Ellyn, Illinois, and Mark Zaprzalka, P.E., Jacob and Hefner Associates, Inc., 1901 S. Meyers Road, Oakbrook Terrace, Illinois 60181 spoke on behalf of the proposed project. Mr. McClain reviewed the transfer of property regarding Memorial Field and gave a general overview of the proposed project. Dr. Meissen stated that they have been moving quickly on the project so that it would be ready as soon as possible for student use. He stated that the stormwater permit for the project was approved by the Village in July and that they began work at that time. Dr. Meissen stated that approximately three weeks after approval of the permit, the Village notified them that certain elements of the project required variations, and work was immediately stopped on those portions of the project. Dr. Meissen stated that there is much community support for the project and that the project will be a great asset to the community.

Engineer Mark Zaprzalka stated that the school's goal is to replace Memorial Field with artificial turf and improve the softball fields. Mr. Zaprzalka displayed photos of the previous and current fields. He also displayed and described the plan submitted for review and explained that the fields are a tight fit due to the triangular shape of the site and little space is available for the dugouts. Mr. Zaprzalka stated that there is a 3-4 foot difference in elevation between Crescent Boulevard and the fields. He stated that they are trying to provide a safe means of crossing the street by directing students to stairs, and the proposed stairs will require an impervious surface setback variation. Mr. Zaprzalka stated that the sidewalk will be 4 feet wide and will be located on private property as the entire right-of-way may be required to build the road. The sidewalk meets ADA code and will provide ADA accessibility from the handicap parking space to the field, extending along the field to the bleacher pad along the first base line. A hard surface that will also be ADA accessible extending from Crescent Boulevard to the donor path will require an impervious surface setback variation. Mr. Zaprzalka stated they are basically reconstructing the previously existing dugouts, and a variation is required for having two accessory buildings on the property. He stated that a variation is also required to have accessory structures on a property that exceed 1,000 square feet. The school would like to use the dugouts to store equipment in an aesthetically pleasing manner.

Dr. Meissen stated that they are interested in working closely with the Village and were seeking a positive recommendation from the Plan Commission. Dr. Meissen stated that he believes the previous dugouts were constructed by volunteer parents and school staff in approximately 2000 and that no variations were issued. Dr. Meissen views the project as a gateway to other plans in process with the Village in the revitalization of the downtown with the school as a hub.

Responses to Questions from the Plan Commission

At the request of Commissioner Strayer, Ms. Stegall gave a brief history of Memorial Park ownership. She also verified for Commissioner Strayer that the school is subject to Village zoning. Ms. Stegall verified for Commissioner Buckton that the petitioner would need to apply for variations in the future if they wanted to add additional accessory structures at the site. Ms. Stegall responded to Commissioner Buckton that the petitioner has a stormwater permit for the project. Ms. Stegall responded to Commissioner Lannen that the Village would not have a record of building permits for the original dugouts on the property because school building permits are the purview of the state and added that no zoning variations have been granted for this property in the past. Mr. McClain responded to Commissioner Swanson that bags of turf currently on the field are in-fill that will be mixed into the field to provide playability. Mr. McClain responded to Commissioner Buckton that the turf in-fill may occasionally need to be replaced and that maintenance on the field is minimal. Mr. McClain responded to Commissioner Strayer that the in-fill product is synthetic, durable and not toxic if inhaled. Commissioner Strayer commented that a paragraph in the petitioner's narrative statement regarding the School District's authority was alarming, and Mr. McClain responded that the paragraph

was included at the advice of counsel and that no one on the petitioner's team objected to the statement. The petitioner's legal counsel was not present to elaborate. At the request of an audience member, Chairman Fullerton read the subject paragraph into the record as follows: *"In the spirit of intergovernmental cooperation, the School District submits this application for review and consideration by the Village. The School District reserves its authority, to the full extent permitted by law, to improve Memorial Field as necessary to meet its program needs, should the variance process or result unduly restrict the District from meeting such needs. The School District, however, believes it is in the best interest of the taxpayers of both public bodies to work cooperatively on these variance issues."* Commissioner Bromann asked what improvements the Village plans for Crescent Boulevard and how those plans would be impacted by the placement of sidewalks. Mr. McClain responded that the School District and their architects presented conceptual plans to the Village that indicated improvements regarding safety (a median, defined walkways, parallel parking, defined drop-off points). Mr. McClain clarified for Chairman Fullerton that their engineers filed for a stormwater permit in April, the stormwater permit was approved in July and work subsequently began. He also clarified that a few weeks later, they were advised that certain portions of the project required variations. When Chairman Fullerton asked why the variations weren't applied for at the time of submittal, Mr. Zaprzalka did not have a clear response, and Ms. Stegall responded that there was some confusion during the permit process as only a stormwater permit was received and Village staff was not aware that the plans included improvements beyond the turf field. Mr. Zaprzalka responded to Commissioner Friedberg that if they were required to conform to the 1,000-square foot accessory structure limit, the School District would likely reduce the size of one of the dugouts. Mr. Zaprzalka added that there is more than 120 feet between the subject lot line and the residential developments to the south. Commissioner Friedberg also asked why the school district didn't inform the Village that variations were required, and Mr. Zaprzalka responded that they believed they believed the dugouts would be allowed as proposed because they were being reconstructed in their original locations. He also stated that they did not consider the dugouts to be accessory structures. Chairman Fullerton pointed out that the combined square footage of the proposed dugouts is more than the original dugouts and exceeds the maximum square footage allowed. Mr. Zaprzalka responded to Commissioner Whalen that engineering plans were submitted with concrete pads indicated and dugouts as an alternative, however, no building elevations were provided. Mr. Zaprzalka responded to Commissioner Buckton that the project meets the stormwater requirements. Ms. Stegall added that a stormwater variation was granted for the property several years ago and runs with the property. Mr. McClain responded to Commissioner Bromann that there is a portable fence at the softball field and described dimensions of the fields. Mr. McClain responded to Chairman Fullerton that a possible variation for bleachers across the northern property line may occur in the future. He also responded to Chairman Fullerton that underground conduit has been laid in the event lights can be installed in the future.

Persons in Favor of or in Opposition to the Petition

Shawn Murphy, 567 Lake Road, Glen Ellyn, angrily criticized the School District and their engineer for not applying for variations that he felt they knew were required and

thus setting a bad example for students. Mr. Murphy was not in favor of the reduced parallel parking planned along Crescent Boulevard and also had health concerns regarding the field substance. Mr. Murphy also had safety concerns regarding proximity to the Union Pacific Railroad and asked if the railroad had been notified about the proposed project. He also was concerned that the School District will do whatever they want although an intergovernmental agreement is in place. Mr. Murphy felt the School District should reveal the entire plan at one time rather than piecemeal.

Commissioner Swanson reminded Mr. Murphy that the purview of the Plan Commission is to comment only on the variations that are the subject of the public hearing.

Cam Page, 206 Hill Avenue, Glen Ellyn, Illinois had a concern regarding water issues and asked if the bleacher pads could be permeable instead of pervious in order to be more environmentally friendly.

Comments from the Plan Commission

Most Plan Commissioners were supportive of the variations being requested and felt the project would be an asset to the community. They were, however, disappointed in the process because they felt that the variations were not recognized in a timely manner. Some Plan Commissioners also expressed concern regarding a disclaimer paragraph in the application packet that seemed to suggest that the School District will move forward with the project with or without Village approval. Commissioner Strayer commented that the paragraph appeared to be confrontational and unnecessary and suggested that the Trustees may want to address the language in that paragraph as it is not in the spirit of intergovernmental cooperation. Some Commissioners felt that the School District began construction even though they were aware approval was required for the variations, however, Commissioners Swanson and Whalen did not feel that the School District intentionally began construction without Village approval. Commissioner Whalen commented that the subject application is unique in that the Village required engineering and zoning conformance but not building permits. Commissioner Swanson added that the School District should take more care to provide full disclosure when planning projects. Some Commissioners felt that the accessory buildings should be built per code and Chairman Fullerton felt that no hardship was proven for the dugouts. Commissioner Swanson commented that portable bleachers need a pervious surface. Commissioner Whalen requested that the petitioner be sure to protect the trees. Commissioner McCormick commented that the petitioner did a great job with a unique parcel. Commissioner Buckton felt that the petitioner's attorney should have been present to explain the disclaimer paragraph and was not supportive of the project.

Ms. Stegall commented that Village staff has enjoyed a good working relationship with School District 87 over the years.

Motion

Commissioner Girling moved, seconded by Commissioner Swanson, to recommend that the Village Board approve zoning variations to allow improvements at Memorial Field as follows: A. A variation from Section 10-5-4(A)4 to allow a dugout to be constructed 9.8 feet from the southern property line adjacent to the Union Pacific railroad in lieu of the minimum side yard setback of 30.5 feet required. B. A variation from Section 10-5-4(A)2 to allow a combined area of 1,067 square feet of freestanding accessory structures on the property in lieu of the maximum area of 1,000 square feet permitted. C. A variation from Section 10-5-4(A)3 to allow more than one of each type of accessory building to be located on the property. D. A variation from Section 10-5-5(C) to allow an impervious surface setback of as little as 0 feet in lieu of the minimum setback of 30.5 feet required.

The recommendation for approval was based on the following findings of fact: 1. The requested variations will not alter the essential character of the locality because the proposed use of the site would remain the same as the existing use. Proposed 1st and 3rd base line dugouts were present prior to current construction operations and will not alter the character of the site and the dugouts and 3rd base bleacher pad will be located along the existing railroad right-of-way, over 300 feet southeast of Crescent Boulevard. In addition, proposed accessory structures totaling 1,067 square feet in size would allow for on-site storage of athletic equipment, which is currently stored on site in plain view, providing for a better general appearance of the site. Impervious surfaces, including a sidewalk, stairs and paver path would allow for safe, field accessibility for students, staff and spectators and will not alter the site's character. 2. The petitioner has demonstrated a practical difficulty and particular hardship as a result of adhering to the strict letter of the regulations of the Zoning Code because: a. The limited area of the site and unique triangular-shaped parcel does not allow for the location of a proposed 3rd base line dugout and the 3rd base line bleacher pad outside of the required 30.5 foot impervious surface setback and 30.5 foot accessory structure setback. Limited site area is due to required safe play distances between a multi-purpose field and softball field, which in turn requires no overlap of differential surfaces in playing surfaces. b. A lengthy lot width along Park ROW (610 feet) results in a relatively large required setback distance around the perimeter of the entire site (including existing railroad right-of-way). c. An approximately 3-4 foot change in elevation between Crescent Boulevard and the athletic fields does not allow for ADA handicap accessibility to the field without the installation of the proposed sidewalk. The proposed sidewalk would extend from an existing handicap parking space, located at the school district's office/garage building at 671 Crescent Boulevard, to the proposed athletic fields. d. The main occupant of the property is located across the street/north of Crescent Boulevard. An existing 3-4 foot change in elevation between Crescent Boulevard and the athletic fields does not allow for safe pedestrian access from the existing Crescent Boulevard crosswalk to the field without the installation of stairs. e. The required 30.5 foot impervious surface setback does not allow for a ADA accessible, hard surface path extending from Crescent Boulevard to a proposed brick paver patio located at the west end of the athletic field. f. A maximum allowable freestanding accessory structure combined area of 1,000 square feet would not

allow for a larger 1st base dugout. This slightly larger dugout would provide locked storage space for athletic equipment which is currently stored on-site in plain view. g. No more than one of each type of accessory structure would not allow the replacement of two dugouts and two dugouts were previously located along the 1st and 3rd base lines. 3. The property in question cannot yield a reasonable return if permitted to be used only under the conditions allowed by the regulations governing the district in which it is located because without the requested zoning variations, the site cannot yield a reasonable return as an athletic field due to a lack of student, staff, ADA and general public access issues referenced above and the lack of a 3rd base dugout and bleacher pad. 4. The plight of the owner is due to unique circumstances because the site is located across the street from Glenbard High School's main campus, limited site area due to an irregularly shaped parcel, differences in elevation between the public right-of-way and site and access issues.

The recommendation for approval was subject to the condition that the project shall be constructed and maintained in substantial conformance with the plans as submitted and the testimony presented at this meeting.

The motion carried with nine (9) "yes" and one (1) "no" vote as follows: Commissioners Bromann, Friedberg, Girling, Lannen, McCormick, Strayer, Swanson, Whalen and Chairman Fullerton voted yes; Commissioner Buckton voted no.

GLEN ELLYN PLAN COMMISSION
TRANSCRIPT OF PUBLIC HEARING
SEPTEMBER 9, 2010

PARTICIPANTS:

Plan Commission
Julie Fullerton, Chairman
Craig Bromann
Todd Buckton
Robert Friedberg
Jeff Girling
Heidi Lannen
Julie McCormick
Jay Strayer
Lenard Swanson
Ray Whalen

Village of Glen Ellyn
Staci Hulseberg, Planning and Development Director
Michele Stegall, Planner

Village Board of Trustees
Michelle Thorsell

Petitioner Representatives
Dr. Michael Meissen, Glenbard High School District 87
Chris McClain, Assistant Superintendent for Business for Glenbard H.S. District 87
Mark Zaprzalka, P.E., Jacob and Hefner Associates, Inc.

APPLICANTS: Glenbard High School District 87

REQUEST: Request for approval of Variations from the Glen Ellyn Zoning Code to accommodate proposed improvements to Memorial Field

PUBLIC HEARING TIME: 7:30 .m. to 9:20 p.m.

FULLERTON Second on the agenda is the public hearing for Memorial Field. May I have a motion to open the public hearing?

STRAYER So moved.

FULLERTON Second?

GIRLING Second.

FULLERTON All in favor?

COMMISSION MEMBERS Aye.

FULLERTON For benefit of those in the audience, I'd like to explain how the public hearing is going to proceed. We will begin with staff coming up, being sworn in and she will present the petitioner's petition on...more of a procedural way so we understand procedurally what we're supposed to look at and then, at that point, when she is done, the petitioner will come up, be sworn in, give a presentation to the Plan Commission. We will have then questions, comments, anything, then, we need to be answered. At that time, if there are any members of the public who would like to speak, we would ask that you come up, be sworn in and give us any kind of feedback, questions, concerns that you have regarding this project.

I would like to add two things to that. For the public, even if you may have questions or concerns before that point, I ask that you hold everything until we have the public portion just so we can follow along with the legal proceeding. And also something I did want to bring up just so there's no misunderstanding, this is a public hearing for four variations but it has nothing to do with lights just in case there was any kind of misunderstanding with that so that has nothing to do with what we're talking about this evening so...Michele?

(THE PARTY IS SWORN)

STEGALL The only item on tonight's agenda is a request by Glenbard High School District 87 for approval of zoning variations to accommodate the construction of new dugouts, sidewalks, pavers, concrete pads and stairs. They are represented this evening by project engineers Jacob and Hefner Associates.

(STEGALL) The site is outlined in red on the aerial photo that's on the overhead. It is bounded to the north by Crescent Boulevard, to the south by the Union Pacific Railroad tracks and there are some residential developments south of that, to the east by Park Row and to the west by Park Boulevard. It is located in our CR Conservation Recreation zoning district.

In order to proceed with the project, there are four variations that are being requested. The first variation is from Section 10-5-4(A)4 of the Zoning Code to allow a dugout to be constructed 9.8 feet from the southern property line in lieu of the minimum accessory structure setback of 30.5 feet required. There's a similar variation from Section 10-5...a similar variation also being requested to allow an impervious surface setback of 9.8 feet in lieu of the 30.5 feet required to accommodate that same dugout. Also, a variation to allow a combined area of free-standing accessory structures on the property of 1,067 square feet in lieu of the maximum area of 1,000 square feet permitted, a variation to allow more than one of each type of accessory building to be located on the property, and a variation to allow an impervious surface setback of as little as zero feet on the property, and I want to go over those in a little bit more detail so the Plan Commission and the public understands what each of the variations actually relate to.

This was the site plan that was included in the petitioners' application packet. Highlighted on the...highlighted on the site plan are some of the variations that are being requested. There are some of the structures and impervious surfaces that variations are being requested for.

I want to touch on the two dugouts first. Those are highlighted in pink, and there are four zoning variations being requested with those dugouts. As I previously indicated, variations are needed from the accessory structure setback and the impervious surface setback, and that would be to allow the third base dugout which is this dugout here to be located 9.8 feet from the property line. The Zoning Code requires a setback of 30.5 feet and that equates to 5 percent of the lot width, and the lot width is taken here along Park Row so 5 percent of that lot width is 30.5 feet and that's how you get the required setback.

(STEGALL) The other variation is to allow combined area free-standing accessory structures of 1,067 square feet in lieu of the 1,000 permitted and, once again, that is for the two dugouts, both the first base dugout and the third base dugout. The first base dugout is somewhat larger than the third base dugout as that structure is also proposed to accommodate some storage for athletic equipment which does not currently exist, and I believe it's 213 square feet of that first base dugout that would be used for storage. There are two—or were two—existing dugouts in approximately the same location, and the square footage of those pre-existing dugouts was about 650 square feet.

The last variation to accommodate the dugouts is to allow two dugouts. The zoning code only allows one of each type of free-standing accessory structure on a property so they would need a variation to construct both of the dugouts.

The next variation that's being requested is for the third base bleacher pad, and that's highlighted here in purple on the site plan. It may be a little difficult to see. They are requesting an impervious surface setback of 8.7 feet to accommodate the bleacher pad in that area. Once again, the required setback is 30.5 feet. The bleachers that would go on that pad would be removable bleachers; therefore, they don't meet the accessory structure definition in the zoning code because they wouldn't be permanently fixed to the ground. They would be removable.

A variation is also being requested for a new sidewalk along Crescent Boulevard. That sidewalk would be located as close as 8.5 feet from the property line. New stairs that would be zero feet from the property line so they'd go right up to the property line, and then the last impervious surface setback variation relates to a brick paver pathway that would lead to a...a donor patio that is being proposed just west of the ball field, and that would be located one foot off of the property line.

So that's an overview of the different variation requests and different structures and impervious surfaces that they relate to.

I did get a question from one Commissioner via e-mail yesterday—asked about ADA requirements for the property, and I gave out some incorrect information which our Building and Zoning Official just clarified for me about an hour ago. So I want to correct that information and also provide it to the rest

(STEGALL) of the Commission. This is the diagram that the Building and Zoning Official, Joe Kvapil, put together for me. I just want to point out a couple things about that. There is...ADA does require there to be an accessible route between the handicap parking spot on the property which is located here and the softball field so the new sidewalk that's proposed along Crescent that would then run south on the property would provide an ADA accessible route from the parking space to the ball field where one does not currently exist. If the new donor patio is for public use, there's also ADA accessibility required there. He made a comment down at the bottom that no accessible route is required for the high school across the street but that it would certainly be desirable. So those are just the notes on that plan that I wanted to point out but that he had made some other comments but those are the most relevant ones. They are related to that ADA accessibility.

The last thing that I do want to touch on a little bit before the petitioner presents has to do with some questions that I got from a number of different Commissioners over the last couple of days about the Village's jurisdiction as it relates to zoning and the School District. So I wanted to give the Plan Commission and the public a little bit of background on that issue, both from the perspective of State law and an intergovernmental agreement that we have with all three school districts—School Districts 41, 87 and 89. You've probably seen in the press lately some news about a disagreement between the College of DuPage and the Village where there's a debate regarding jurisdictional issues. That is completely separate from the school districts. State law treats junior colleges differently from school districts so the debate that's going on right now with COD and the State law doesn't apply in this case because school districts are regulated separately by a different section of the...the municipal code.

We did enter into an intergovernmental agreement back in 1989 with all three of the school districts and, at that time, we were adopting a new zoning code and we were looking to make school...public schools special uses. They had previously and historically been permitted uses in zoning districts. So, essentially, what the intergovernmental agreement did was it allowed school districts to remain permitted uses in zoning districts as opposed to special uses with the caveat that this intergovernmental agreement was entered into, and the intergovernmental agreement requires the school districts to hold their own public hearings in the same manner that the

(STEGALL) Village would for a special use request. The school districts have their own governmental bodies, they have their own elected officials and their own board so if there's an expansion project for a school, they hold their own public hearings, they copy the Village on the notices which would be the same notices that the Village requires for our own hearings—something in the paper, a sign on the property and notification to the surrounding property owners.

So, really, what the intergovernmental agreement does is it allows schools to remain as permitted uses with the condition that they hold their own public hearings. The intergovernmental agreement, however, is very clear that school districts must still comply with zoning standards and if they're not meeting zoning standards, bulk requirements such as setbacks, building height, any other standard in the Zoning Code, they must go through the normal public hearing process and request approval or receive approval of zoning variations just like any other property owner. So I did receive some questions about that and I just wanted to speak to that for a minute. If anyone, any Commissioners, have any more questions about that, I can talk about it further but that's just kind of an overview of our IGA with the school distirct. And if there are any questions about any of the technical questions about the variations being requested, I could try and answer those as well.

STRAYER Michele, I have a background question. Can you just give a little background about Memorial Park because I know it's had multiple owners over the years and I know the…not exactly how it worked out but the Village has financed certain improvements to Memorial Park which are now being changed substantially, obviously. Can you just give a little history about the ownership? One time, I thought it was owned by the Park District and now the deed in our package shows that the Village is conveying the property to the school district and it…at no consideration, at least on the deed.

STEGALL Mm-hmm.

STRAYER What is the history of that?

STEGALL Your recollection is correct. It was initially owned by the Park District, then it went to the Village, and the Village recently sold it to the School District. So that was kind of the…the train of ownership.

STRAYER Okay. And then there was an intergovernmental agreement with…a specific agreement with respect to Memorial Park?

STEGALL I'm sure there was an agreement related to the purchase of the property. I'm not aware of the conditions of that agreement.

STRAYER Okay. But the Village…what did the Village finance, like, on behalf of, I guess, the school district? What did they finance? The acquisition of the property?

STEGALL I'm not 100 percent sure what happened there. I just know that the ownership changed hands. I think the last change of ownership was just about a year ago. It wasn't that long ago but I really do not know the other details.

FULLERTON If the petitioner has more information, you can speak to that when it's (UNINTELLIGIBLE).

STRAYER Okay.

FULLERTON Okay. Thank you.

STRAYER I did have one other thing I just wanted to be sure I understood. Michele, I assume you were addressing this paragraph that's in the report of Jacob Hefner and Associates. There's a paragraph at the end that says no page number that talks about in the spirit of intergovernmental cooperation, the school district submits this application. Can you explain what that paragraph means?

STEGALL It's my understanding that their attorney asked them to add that to the packet, and I think it's the paragraph that prompted the questions from a number of you about the jurisdiction of the Village over zoning on the School District's property. So, yes, that's why I went in a little bit to the IGA but the School District is absolutely subject to Village zoning.

STRAYER They're absolutely what?

STEGALL They're absolutely subject to Village zoning.

STRAYER Okay. It seems to say to me, though, if we approve these variances, and I think they're reasonable—I don't have any particular problem with them—but if we didn't approve them, it seems to say to me that it doesn't make any difference.

STEGALL You would need to ask the petitioner about that.

STRAYER Okay. I will save that question.

STEGALL They're required to comply with the Village zoning. There is some work that has already occurred out there that is at their own risk. We would treat them like any other property owner.

STRAYER Okay.

BUCKTON So in the future, then, if the petitioner wanted to add—I don't know—rest rooms or other...other structures, accessory structures, they'd have to come back for another variance because they've already exceeded?

STEGALL Yes.

BUCKTON Okay. What about federal regulations? Are they bound by FEMA regulations for flood plain?

STEGALL Yes, and they did get a stormwater permit for the project back in July of this year.

BUCKTON Okay.

STEGALL So they're meeting all the stormwater regulations, and they have made some modifications to their existing detention basin to accommodate the work.

BUCKTON Thank you.

LANNEN I have a question. It looks like there's two new dugouts that are being built, that they're being built in similar locations to the previous dugouts.

STEGALL Mm-hmm.

LANNEN Does the Village have file variations that were approved with the previous dugouts because it would appear that they would not have the setback also?

STEGALL We did not find on file any previous zoning variation approvals and permits. The one thing with school districts and state law is school districts are subject to zoning. Building permits and inspections are the purview of the State. So we would not have permits on file to give us construction dates for those dugouts.

LANNEN But the previous dugouts would not have met the setback requirement either, correct?

STEGALL It would depend what the code was at the time that they were constructed.

LANNEN Okay.

FULLERTON And we don't know what year they were constructed?

STEGALL No.

FULLERTON Or the tennis courts or the basketball court (UNINTELLIGIBLE).

STEGALL Correct. The petitioner may have some knowledge in that regard but we did go back and look to see what approvals may or may not have been granted on the property recently. There were no zoning variations…or in the past.

FULLERTON Any other questions for Michele? No? Okay. Thank you. At this time, we would ask for the petitioner to come up and be sworn in, please.

SECRETARY Would you please state your name, your professional capacity and your business address for the public record?

MCCLAIN Sure. My name is Chris McClain. I'm the Assistant Superintendent for Business for Glenbard High School District 87. Address—596 Crescent Boulevard.

My name is Mark Zaprzalka, P.E., Jacob and Hefner Associates, Inc., 1901 S. Meyers Road, Oakbrook Terrace, Illinois, 60181.

(THE PARTIES ARE SWORN)

MCCLAIN Start? Okay. Well, first of all, thank you, Plan Commission, for hearing our application request tonight. I know that staff and the Commission worked with us to try and accelerate this process and we're very appreciative. Before I go into kind of a general overview, I wanted to just introduce some of the team members here. Dr. Michael Meissen is our Superintendent of Schools, Bob Verisario is our Director for Facilities, Grounds and Transportation, Patrick Brosnan is President of Legat Architects, Paul Pessetti is one of his associates at Legat

(MCCLAIN) Architects and Mark Zaprzalka is our civil engineer working with Jacob and Hefner. So those are kind of the team members that are here tonight.

So, really, just by way of a general overview—maybe even before I get to the general overview, I can talk very briefly to the question you had before, sir, regarding the transfer of property. I've been with the District two years but after I'd been with the District for approximately a year, we had made the final payment to the Village for the purchase of Memorial Field. The payments were 9 years, $270,000 per year, and the capacity I believe that the Village operated under was really operated as a financing tool for the asset transfer so the Park District, I believe at that particular point in time, was looking for additional resources to make improvements to their properties. The Village collaborated with them to really operate as their bank so they provided the dollars to the Park District, purchased the property from the Park District and...and then had a funding model in place whereby we paid back the Village over a 9-year time frame for the...for the acquisition of the property. So, and like you said, the property's closed, the title's been transferred, and that's some of the background behind that.

Just by way of general overview, we've been working very diligently with the Village collaborating on this project. Mr. Jones and other members of staff have been great. We know that the...the Village Board has approved an engineering study for the Crescent roadway improvement which I'm sure you're all aware of, and we've been working very closely in terms of the footprint of the Memorial Field project and how that is congruent to the Crescent roadway improvement so we're very excited about the projects here. We're very excited about Memorial Field because we know that it's going to provide great value to our students and staff and community at large so we're very...very happy about that.

As far as the variance process worked, we've been moving very quickly on the project. I'm sure you've all been by it. We've been making great progress. We hope to have it completed here by the end of September so our students can start using it for physical education and also for extracurricular use. We also signed an intergovernmental agreement with the Park District so that they can run programs on that space as well.

(MCCLAIN) The…the whole variance process—we had submitted a permit for the project back in April. We received approval of that permit in July, and we started work because we had a pretty tight time line to try and get the project done as soon as possible.

Approximately three weeks after the permit was approved, we were notified by the Village that certain elements of the project required a variance so as soon as we were notified of that, for those portions of the project that Michele pointed out, we immediately stopped any work on those particular portions of the project. The field construction, itself, not under consideration for the variance, but the dugout, the dugout on the third base side, immediately stopped. Any sidewalk work that would have been done near the Crescent roadway—nothing done. So we absolutely are respectful of the Village ordinances and code and we…after we received notification from Michele's office, we…we stopped that portion of the project and…which is what has brought us here tonight, and, again, we're very appreciative that you're allowing us to move this process along quickly because we just want to get the project done in the least costly manner and the most efficient manner to…to make it a great project for…for our students.

The primary reason that we're—and if you're not—this is more general information—but community groups have provided a fair amount of funding for the project so we believe there's a lot of community support for the project. We think it's going to be a great asset to the community.

That's really all the general information I have about the project and kind of the sequence of events that led us to the variance process. I can answer any questions now before I hand it over to Mark because I think Mark is going to talk a little bit about some more of the statistics regarding our variance request.

Does anybody have any questions for me? Sir?

SWANSON The field appears to be pretty well completed and yet there are these many, many large bags of turf sitting there.

MCCLAIN Right.

SWANSON Just as a matter of curiosity, where's all that turf going to go?

MCCLAIN Yeah, that's the infill so that's the…

SWANSON What do you mean by infill?

MCCLAIN The…well, the actual field has already been laid, like you said and it's already been sown and all the striping's been laid in as well, glued in, but it was just the rug, itself. What really makes the field playable is you need to have the appropriate surfacing and cushioning so there's a sufficient layer of sand and crumb rubber infill mix that gets laid into the…into the shag carpeting per se…

SWANSON Okay.

MCCLAIN …to get the playability of the space for the kids. So that's…that's what all that is and they're in the process of installing that now, and we were at a meeting this morning and they indicated that that should be complete by close of day on Monday. Is that right, Bob?

VERISARIO Right.

MCCLAIN Yeah.

SWANSON I do have one question pertinent to the application. The report that we have indicates that the sidewalk going along Crescent Boulevard is going to be 4 feet wide. It's my understanding that a community sidewalk generally in Glen Ellyn would be 5 foot square. How did you choose to have a 4-foot wide sidewalk? Is that adequate?

MCCLAIN I'd probably defer to my…my associate here on that one. And I'm sure Mark could answer that here in a moment.

SWANSON Thank you.

MCCLAIN Sure. Any other questions for me?

BUCKTON Yeah, a little further clarification on the turf infill. Is that a consumable? Is that something that needs to be replaced?

MCCLAIN Every great once in a while, you may need to provide additional infill.

BUCKTON Uh-huh.

MCCLAIN Our field at North that we...we installed last summer has not required that to date. Our vendor manufacturer that we're working with, Field Turf (UNINTELLIGIBLE) indicates that it's just on an as-needed basis—wouldn't really require much. Most of the maintenance work is really just to clear any leaves or debris from the field with kind of a raking process and at North, if that's any indication of what we'd see here at Memorial Field, the amount of maintenance on the fields is very minimal but it's really on an as-needed basis.

BUCKTON So all those bags go into the field?

MCCLAIN All those bags go into the field.

BUCKTON Wow.

BUCKTON Yeah, one bag left over that we're hanging onto for that very reason that you just mentioned.

BUCKTON Very good. Thank you.

MCCLAIN Sure.

STRAYER So the fill that goes on is some sort of a synthetic product?

MCCLAIN Yeah, it's a synthetic field, and the infill is what the patented solution is that field turf purports, you know, to...to customers.

STRAYER Jo and I watch soccer on TV. That's why I see that black puff of smoke go up.

MCCLAIN Right. Right.

STRAYER If a player inhales that, is there any issue with that?

MCCLAIN No, and we covered this extensively with our Board. There were a lot of questions and concerns that have come from different, you know, residents in the community and rightfully so because they're not familiar with the product, and we provided a great deal of information, independent, you know, objective information for them. There's a lot of stuff out on the internet, as you know, that you can provide a lot...find a lot of articles that are for...and a lot that are against, and our attempt was to find as many independent, you know, objective research articles that we could provide to them. So we're confident it's safe, and if you drive around the Chicagoland—

(MCCLAIN) not to say that just because the neighbor's doing it makes it right but these surfaces are going up all over the place. I know Hinsdale's putting in their two to four here as we speak. Many of our communities are putting these in. And the main reason why is they're so durable and, you know, when you have football fields that after a couple bad rains, the fields get destroyed and then you put an orange, you know, temporary fence around them and seed them all the time, you're not getting the playability from these surfaces. You really need to so that the kids can really be engaged in activities.

STRAYER (UNINTELLIGIBLE) I said one final thing. Could you comment on this one paragraph that talks about the intergovernment cooperation (UNINTELLIGIBLE).

MCCLAIN Yeah, we were just following the lead of our counsel, you know.

STRAYER Okay. And what does it mean?

MCCLAIN I...I'd probably have to defer to him but we could probably get back to you on that.

STRAYER I mean, I can read the plain words of it, and it is rather...it seems to be kind of alarming—that even if we...if we didn't approve your changes, it seems to say, well, the District would just go ahead and do what they wanted to do in order to meet their educational...the educational needs of the District. I...

MCCLAIN Yeah. Yeah. Our mission tonight, sir, is to...is to propose the...the application on the merits of what the need is. That's...that's really our intent tonight.

STRAYER Let me ask it a different way.

MCCLAIN Sure.

STRAYER You say you put that in there at the insistence of your legal counsel?

MCCLAIN Advice of our counsel, yeah.

STRAYER Did anyone object to it being put in there?

MCCLAIN We didn't—no.

BUCKTON Is your legal counsel here this evening?

MCCLAIN No. They're expensive so we didn't want to write a...more checks for our taxpayers so...

FULLERTON I'd be happy to read about the..."In the spirit of inter-governmental cooperation, the School District submits this application for review and consideration by the Village. The School District reserves its authority to the full extent permitted by law to improve Memorial Field as necessary to meet its program needs should the variance process or result unduly restrict the district from meeting such needs. The School District, however, believes it is in the best interest of the taxpayers of both public bodies to work cooperatively on these variance issues."

MCCLAIN Any other questions for me?

BROMANN Do we know what the Village plans for Crescent Boulevard as far as improving it and how the placement of sidewalks may or may not affect that?

MCCLAIN Yeah, we've...I know that the Village has retained an engineer—I'm trying to think...McDonald and Burns...is that correct?

UNIDENTIFIED Burns and McDonnell.

MCCLAIN Burns and McDonnell—and they have submitted an application to the DuPage Mayor and Managers task force or committee for surface transportation project funding and, if awarded, the Village could get up to 70 percent of funding of the project for those eligible costs that would be considered allowable under the...the application. And the School District and our architects probably 6 to 9, probably 6 to 8 months ago, somewhere in that time frame, we presented some conceptual plans to the Village in terms of what Crescent maybe could look like from an improvement perspective near the high school to really improve the safety for our students and the community, and the area right now...unfortunately, parents sometimes will pull U-turns. There's no...the drop-off points aren't as defined as they probably...as, well, not probably...they're not defined as well as they should be, etcetera. So the plan calls for a median down the middle of the road. There would be very defined walkways for students. There would be a sidewalk like you mentioned on the south

(MCCLAIN) side of the...of the roadway. Parking would no longer be diagonal. It would be parallel. There would be defined drop-off points. So it would be aesthetically strong but it would also be very safe which is really the primary focus. And I know that that application has been submitted. The Village was good enough to consult with us for our input on that application as well and, you know, we'll just...we'll just see what happens. But there are plans that were submitted that are looking for potential...potential funding from...from mayor and managers program. I don't know if I answered your question or not but that's...and the main thing was we just wanted to work really as a collaborative team which I think we did to talk about what's our footprint for the Crescent...for the Memorial Field project and then how would the Crescent roadway work congruently with that just to make sure that we didn't do something from where our footprint is that wouldn't make sense for what the master plan could be over time. So that was the reason for the teaming, and our engineering firm worked closely with Burns and McDonnell to make sure there were really strong synergies there.

FULLERTON Let me just ask one question—back up for a second here. You stated that you applied for a stormwater permit in April. Is that correct?

MCCLAIN Yeah, stormwater as well. I know all of our permits were filed in April, yeah.

FULLERTON And that would have been done by the engineers?

MCCLAIN Right. They would have filed them on our behalf. We would have...you know, we would have signed the application.

FULLERTON Okay. And then if I understand correctly, then after that permit was issued is when the realization came about that you needed these variances to follow within our zoning code?

MCCLAIN Well, in July, our permit was approved.

FULLERTON Okay.

MCCLAIN And then...and then we started work. And then after...a few weeks after that, we were advised that, in fact, certain portions of the project did require a variance.

FULLERTON Okay. I guess my question is why did it take the Village to tell the District that the variances were needed? Why were they not applied for to begin with? And I don't know if you can answer that question. I'm just…

MCCLAIN Mark might be better equipped to answer that.

FULLERTON Okay.

MCCLAIN But we submitted our application with full disclosure on what were all the different elements that we were looking for in the project. So, I don't know. Is that a joint responsibility? Is it our—I don't know. Mark maybe can address that a little bit better than I can.

STEGALL I think there was a little bit of confusion with the permit process because we did receive a stormwater permit application and processed that as we normally would. I think it was believed that the stormwater permit application was for the turf field, and we didn't realize that there were any additional improvements proposed on the plan. So the stormwater permit application was routed to our engineer like it normally would be. He had no way of knowing that no additional plan reviews were being done or were needed. It just went through the typical engineering process and the stormwater permit was issued without the Planning and Development Department realizing that there were these other improvements also shown on the plan. So there was a little bit of miscommunication and confusion there.

It was probably a little over a month ago someone came into the Planning and Development counter inquiring about a building permit for the dugouts, at which time, we indicated that, you know, building permits would not go through us but, you know, they shouldn't construct anything until we were able to review the zoning from the standpoint of the Intergovernmental Agreement. And that's when I think the Planning team, you know, pulled out the stormwater permit application, identified some variations, and we started working with the School District from there on the variation applications.

FULLERTON Thank you. Other questions?

MCCLAIN Okay. Thank you.

FULLERTON Thank you.

MCCLAIN Mark, do you want to…?

ZAPRZALKA Good evening, Planning Commission and members of the public. I'd like to begin with going over an overview of our particular hardships that we had to overcome and one of the reasons why we're requesting relief from the Zoning Code as part of this project.

To begin with, I'd like to show you guys the previously existing fields that…was out at Memorial Field. Basically, we've got the…the multi-use field over here and the softball field right in the corner. You can see that it's…it's squeezed in there pretty tight, just basically based on the unique shape of the parcel. It's basically triangular shaped, not allowing for a lot of room for the field and for the softball fields. The goal of the School District was to basically replace the field with artificial turf, synthetic field, and approve the softball fields.

With that said, this is our plan that we submitted as part of the variance package As you can see, you know, the new field and the softball field—they're also sandwiched in here pretty tight. There's only about 350 to 375 feet between the existing right-of-way line and the property line at the south and, you know, with that said, we're trying to fit in a 200-foot wide multi-use field for P.E. and for public use, including the Park District, and also the softball field in the corner while still trying to maintain a safe 10-foot wide buffer between the two fields for overlap and so there's no different transition…different surface transitions.

With that said, just squeezing in the softball fields and a multi-purpose field doesn't leave a lot of room for the dugouts, and, as Michele mentioned, we've got the…the third base line dug out which falls…doesn't fall outside of the 30-1/2-foot buffer as well as the softball fields.

So, in addition, we've got about a 3 to 4-foot difference in elevation between Crescent Boulevard and the fields and, with that said, we've got a crosswalk connecting the main campus across the street to the field. We're trying to provide a safe mode of crossing that 3 to 4-foot differential by installing stairs, and the stairs are going to require the variation for impervious surfaces within a 30-1/2-foot buffer. The sidewalk that we also have proposed within that buffer we're requesting relief, and our hardship, as well, we'd like to provide ADA

(ZAPRZALKA) accessibility from the existing handicapped parking spot by the District's office to the building.

To answer the Plan Commission's question about the width of the sidewalk, the sidewalk's actually going to be located on private property, not within the public right-of-way. The reason behind that is once Crescent Boulevard roadway improvements occur, we don't quite know yet what's going to be built there and they may need the entire right-of-way to build the road but the sidewalk's going to be privately owned and, as a result, we're going with a 4-foot wide width, and the 4-foot wide width actually meets the ADA accessibility code which is, I think, 36 inches wide. So, basically, the sidewalk will provide the ADA access from the handicapped parking spot to the field and it'll extend along the field to the bleacher pad along the first base line.

The...the reigning variances that we're requesting relief from is the donor path that...that was mentioned earlier. We'd like to provide a hard surface extending from Crescent Boulevard to the donor path. Also for ADA accessibility and extending that path to the right-of-way line will require a variance for...for falling within a 30-1/2-foot distance. The remaining items we're requesting relief for are similar shaped accessory buildings which include the two dugouts. Basically, we're reconstructing the previously existing dugouts out there, trying to have a softball field with one dugout along the first base line. We'd like to match that along the third base line and it's my understanding, too, that the Zoning Code is more...more referenced to like residential type developments where they may have a garage or shed so we believe it's a unique circumstance where we're not asking for an actual shed or garage building. We're actually asking...requesting relief from the Zoning Code for the...for dugout...for, actually, two dugouts.

And, finally, the remaining relief we're requesting for is accessory buildings over 1,000 square feet in size. We're requesting a larger size accessory building so we can provide storage on the site for equipment owned by the school previously. They were basically chaining it to the existing fence and stationing it right in the middle of the field and with the additional space and accessory buildings, they can use the ...the storage inside the building to store that equipment and basically provide a more pleasing look to the fields and, hopefully, fitting all their equipment in there.

(ZAPRZALKA) With that said, I'm open to any questions regarding any of the variances we're requesting.

FRIEDBERG I have a question regarding the house at 67. What would be a feasible solution that you can come up with if we said to you you had to get to the 1,000 square feet? What would you suggest you would have to do?

ZAPRZALKA We would likely have to trim back one of the dugouts probably about 7, 8 feet which, as of right now, the dugouts are pretty standard size—reducing that size by even 7, 8 feet would probably not allow enough sufficient room for an entire team.

I'd also like to mention, too, that, you know, even though the dugout and the third base line, bleacher line, are along the property line, there's also a 100-foot wide right-of-way running along that south property line and there's even additional distance beyond that for, you know, you reach residential development to the south, further south, so, you know, it's a unique situation. We're not butting up right up against somebody's, you know, somebody's residence. We've got over 125-150 feet between our lot line and the next adjacent residential lot to the south.

FULLERTON All right. I'll ask you the same question that I asked the gentleman before you. Can you explain why the variances were not applied for before construction began?

ZAPRZALKA Well, we submitted to the Village back in April as we mentioned before and when we made our initial submittal, we also submitted a building permit application and when we made our initial submittal, we were told that...we were asked whether, you know, our project would have a fence included in it and when we indicated it would, we were to actually submit a building permit application.and once we submitted that application, it was under our understanding that the plans were going to be disseminated throughout the Planning Department as well as Public Works and engineering, and we didn't find out until later on—months later—that the variances would be required.

FRIEDBERG I'll ask the question a little differently. Since the ordinance regarding—I'll just use the example of the 1,000 square feet—since that ordinance exists, why wouldn't that have been designed into the plans and/or variance been identified and say, hey, listen, we know we're building it at 1,067 square feet so I

(FRIEDBERG) know that I'm going to have to request a variance when I come to the Village to present any—so I guess the question really comes down to why didn't the District bring that to the Village's attention or why didn't they design it in accordance with the standards of the ordinance?

ZAPRZALKA As far as that requirement of the Zoning Code, I personally was unaware about the 1,000 square foot maximum (UNINTELLIGIBLE) area.

FRIEDBERG Well, you can go to the next one...setbacks. Pick one. It doesn't really matter. I mean, those ordinances exist. We're just curious as to why...it almost seems like the Village was put in a position where they had to find it versus the designers who know the ordinances identifying that for the District and saying hey, listen, we're going to submit this thing but you should know that there are some variances that you need to request so we're just trying to understand why that didn't occur.

FULLERTON You'll have to be sworn in, sir.

UNIDENTIFIED PERSONEL (Unintelligible)

FULLERTON Oh, well.

ZAPRZALKA To answer your question, you know, when we were reconstructing the dugouts, we were looking at replacing them in the original location and also we weren't really considering them as accessory structures, you know, considering that the dugouts were located there to begin with and we were simply replacing them, it was our understanding that it would be allowed.

FULLERTON You were replacing them going from 650 square feet to 1,067 square feet so, yes, you were replacing them where they were but, obviously, much bigger.

ZAPRZALKA Increasing the size, right.

FRIEDBERG And their purpose. If you change the purpose of one of the dugouts from a dugout to a dugout and a...you know, when I looked at it, it was, you know, the dugout but then it's really a large enclosed storage shed, right, that didn't exist. That they happen to be attached to each other is sort of a different issue.

ZAPRZALKA Right. We did add about 20 feet to the end of the first base line dugout for the storage.

FRIEDBERG Right, which brings you over the thousand.

ZAPRZALKA Correct.

FRIEDBERG I don't think you're answering her question, though.

ZAPRZALKA And I guess the argument can go, well, whether the dugout, itself, is considered an accessory structure. The shed would be but would the dugout be an accessory to what main structure?

WHALEN You know, when you applied for the permit originally, did you have, like, building sections and elevations for the dugout and different things or was it more just like an engineering type plan?

ZAPRZALKA We submitted engineering plans so…

WHALEN So the application really didn't have any buildings or structures or the dugout like how they were constructed or size or…

ZAPRZALKA No, it didn't other than mentioning it on the plans that the dugout would be constructed as an alternate. Originally, you know, the plans showed concrete pads in those areas and alternates depending on the cost to build those were listed on the plans as, you know, an alternate to construct a dugout on that pad so the actual note was on there for an alternate dugout construction. But you're correct. No plans were submitted showing elevations of those dugouts.

BUCKTON I know this has nothing to do with…with this evening but I'm curious. Were you…did your firm or did you personally have…have discussions about the stormwater detention?

ZAPRZALKA Yes. We coordinated with the Village's consulting engineer, and the stormwater detention meets the ordinance.

BUCKTON Okay. And was there a variation involved with that or was…fee in lieu or could you…

ZAPRZALKA No.

BUCKTON Could you go into a little detail on that?

ZAPRZALKA Basically, we met the DuPage County Stormwater Management Ordinance as far as release rates allowed for the site.

BUCKTON Okay.

ZAPRZALKA We're basically not increasing any from the pre-existing.

BUCKTON Great.

STEGALL There is actually an existing stormwater variation on the property that was granted several years ago. I don't know if you...the petitioner is aware of the date. I'm thinking it was sometime in the 90's. So the variation runs with the property and when they made improvements back, like I said, back in the 90's in association with that variation, they actually didn't use all of the variation but kind of designed it to a better capacity or lesser run-off than they would have been able to under the variation that was granted but that runs with the property and they've continued to design to those standards.

ZAPRZALKA Correct. They...I believe the original variance allowed for a large...lot greater release rate than was there previously existing as well as what we're releasing as of right now—design...design stage. So, basically, we meet the ordinance as far as release rates and we're decreasing the release rate from what was existing before.

BUCKTON Wasn't that variation granted, though, before FEMA had...had re-issued floodplain changes? Floodplain variations?

ZAPRZALKA This site's not located within a floodplain so...

BUCKTON But I guess my understanding is...is that...is that...my understanding is those variations were done before...before there were changes made and, again, does the variation take into account the structure...the new structure on the facility today? And I guess that's a question to Michele.

STEGALL I'll probably address it and if the petitioner wants to chime in—the, you know, when the stormwater permit plans were reviewed, it's my understanding from talking to our consulting engineer, Bill McGurr, that he looked at the additional improvements that were being proposed so with the improvements that are proposed on this site, they are still in

(STEGALL) compliance with that previous variation and actually making a little bit of an improvement in that regard.

Your question with the flood plain and the stormwater ordinance are really two different issues—the stormwater regulations this is complying with and the petitioner indicated this property is not located within a flood plain.

BUCKTON Very good. Thank you.

SWANSON Am I correct in reading this blueprint, and I think I am, that the dugouts are actually 10 feet wide? Sometimes the small print gets to me.

ZAPRZALKA Basically, this…the dugouts are…this is the third base line dugout and this is the first base line dugout. The dugouts are about 10-1/2 feet wide, 10.7.

SWANSON So, essentially, you're adding 6.7 feet in length to one of the dugouts which would account for your then 67 square feet of additional space.

ZAPRZALKA Correct.

FULLERTON Other questions?

BROMANN The softball field—is it planned to have a fence or not a fence?

MCCLAIN It's not planned for an outfield fence—not a permanent fence. They always…and they currently use a portable fence that they put out there to designate the outfield line. So…I think it's plastic, they put it out and then after the event, then they…they'll put it back in storage.

BROMANN Okay. And the field itself—is it basically the same dimensions from, like, home plate to center field, the larger field?

MCCLAIN Yeah, basically, same dimensions.

BROMANN Okay. Then how much room is there from, like, center field to the all purpose field?

ZAPRZALKA Yeah. The infield has a 60-foot radius so from, say, the pitcher's mound to the edge of the infield is 60 feet, and then we have another minimum 10-foot from the edge of the infield

(ZAPRZALKA) to the...the edge of the turf field. Basically, the outfield overlaps onto the multi-purpose synthetic turf field.

FULLERTON Okay. I just have two quick questions. Regarding the bleacher pad, it says that we may need a...you may need a future variation for the bleachers planned across the northern property line? I know they're not in the plans but is that in the foreseeable future?

MCCLAIN We're looking to improve seating space for our community so...and we need to work with our architect firm and huddle and to find what would be some future improvements that we'd like at the site and those that require variances certainly would follow the process.

FULLERTON Same question regarding lights. I know that's not in front of us and I'm the one that said we're not going to talk about it tonight—I did say that—however, I guess my question would be is there anything in place already for the future in case at some point you would want lights.

MCCLAIN Yeah, it's our hope. I mean, part of our plan was to lay underground conduit under the field. It was the appropriate time to do it. It's our hope, our aspirations that at some point in time, we can get approval for that.

FULLERTON So the conduit is laid so you wouldn't have to tear up the field at another future date.

MCCLAIN Correct.

FULLERTON That's all we have to say about lights—I'm sorry. Other questions?

MCCLAIN So, Commissioners, just to recap, we're really excited about the project. We're really looking for your support tonight. I know maybe some of the timely issues that you've identified are disconcerting but, at the end of the day, we're all about trying to do something good for our kids and for our community. That's the major intent we rely on. Our school district relies on our architecture firm and our engineering firm to identify spaces that are optimal for our programs and those are the recommendations that we received. So we're just looking for your support and assistance so we can make this thing happen. Thank you.

FULLERTON Thank you. Is there anyone else who would like to speak for the petitioner? Yes, sir? We'd ask that you be sworn in.

SECRETARY Would you please state your name, your professional capacity and your business address for the public record?

MEISSEN Good evening. My name is Mike Meissen, School Superintendent, and I just wanted to reinforce some of the commentary that's already been made by Chris McClain.

(THE PARTY IS SWORN)

We are very much are interested in working very closely with the Village. By no means is there an intent to put together plans and move forward without the blessing of this group. We know that the school is intricately connected to the community. We do see this as an enhancement primarily for the full functioning of a comprehensive high school to keep kids on campus safely, reducing costs for busing and all the rest of it. There was great care in planning given to allowing the girls' softball team to play on site so that was the reason for the multi-purpose, multi-use, highly durable field for inter-scholastic athletics as well as curriculum offerings in physical education and/or band for the…for the field and then to try and keep the soccer—or the softball team on campus.

One of the things that was discussed is, you know, did the School District know about the structure for dugouts in variance. I tried hard to look at that in the history for the School District, and I think that the previous dugouts were constructed with voluntary efforts from parents and school staff about the time that the field house was built. So that goes back to about 2000, I believe, and to my knowledge, in the records at the school, there was not a variance that was requested nor was there one issue when those were built. Whether that's a big deal or not, I wanted to talk about it.

And I can speak from a generalist's point-of-view that we certainly know, you know, we want to work closely with the Village because, as Chris mentioned, our business manager, you know, we see this as kind of a gateway situation to other plans that are in the works with the Village on the revitalization of downtown, the school being a hub and some safety features that are planned with Crescent Road and certainly we would be looking to work with any and all governmental entities so that

(MEISSEN) we can, you know, share costs, share purpose and share improvements. And, naturally, I know that may happen over time but we did share the concept ideas related to the Crescent Road enhancements primarily from safety point-of-view for students and families, both vehicular traffic and student pedestrian traffic with the Village Trustees, I believe, six to nine months ago. I'd be happy to, you know, make that information available, too, so when we're laying this footprint down, we want to make sure that that's compatible with larger visionary kinds of things that we think would be beneficial to the school community and the larger community. Thanks.

FULLERTON Thank you. Anyone else care to speak for the petitioner?

(NO RESPONSE)

Okay. At this time, I'd like to open up to the public. If there's anybody who has any questions, concerns, comments, this would be your time to come up and share them. Yes, sir. Come on up.

MURPHY I don't want to drop it (referring to microphone).

SECRETARY Would you please state your name and address for the public record?

Good evening, Commissioners. My name is Shawn Murphy. I live at 567 Lake Road.

(THE PARTY IS SWORN)

I came tonight to get a little more information. Obviously, you're still getting information and future plans and other plans. I don't understand why we don't even have an overlay of the proposed Crescent expansion on top of this plan for this Commission to take a look at. Separate departments, what have you.

Anyway, I find the whole thing quite amusing. The engineer should be failed. I mean, this is academia type people right? What grade would you give your engineer? They knew. They knew all along but we're not going to get into that. Now the people that are teaching our students—what are we teaching them? Don't get caught. Let the…let the planning commission figure out that they needed all these zoning ordinance variations. It…it's mind boggling to see how far,

(MURPHY) how fast this has gone…when confusion in the permit process. This is the best wool over the eyes that I've seen go on.

A couple items. The fence. Questions. I don't need answers. These are all rhetorical. They're going to do what they want to do. To answer both your questions, the paragraph that I asked you to read out loud—end of day, they're going to do what they want, my guess. The fence. It's my understanding the fence might not be a fence that you can see through. It will be a…you know, it has the green stuff in it so you can't see through the fencing. Don't need to know. In other words, they want you to pay the five dollars to come and sit inside of the all-purpose field versus walking by.

Parking and water I find totally amusing because the proposed project is to get rid of the diagonal parking which goes to parallel parking which is normally a 2 to 1 ratio with fewer parking spots.

So now we have this nice new field. Where are people going to park because you're now reducing the parking in front of the…on Crescent by probably half going to parallel. And, truthfully, parallel parking's a whole lot harder to do. It was the only day I ditched driver's ed. Okay? Parallel parking takes more time and it takes less cars. But you need…when an engineer is using terms like squeeze, you know, the field, it was too big for that parcel. And now they're asking for variances but they knew all along they were squeezing this thing in there. His exact words. I'm not going to go off too much on that.

The black stuff. There are safety and health concerns about these fields. They're popping up all over the place but long term so, you know, good question—what if I inhale it? Well, as certain presidents say, "Don't inhale it." As you're getting the stuff kicked in your face, don't inhale it. If you drive by that facility now, it smells delightful, okay? I don't know if we've got environmental zoning ordinances but the smell coming off that field, and that's before they dumped all those big bags of pellets, it smells pretty…I don't know how the kids are going to even breathe out there smelling it. It's like putting your head in a plastic bag.

I want to know if the railroad, the Union Pacific, was notified about these variance requests. They're land owners but they're not residents. I don't know how the formal notification process

(MURPHY) works. I have safety concerns because you're getting awful close to those train tracks. Debris comes off of train tracks so I don't know if the Union Pacific might have something to say about safety concerns and building these structures so close to that.

Somebody addressed the ADA. (UNINTELLIGIBLE). Part of the history, too, it's my understanding because I had a conversation with Mr. Duchon, I believe 87 owned it, sold it to the Park District and now the Park District's selling it back to 87 for roughly $3,000,000, 10-year note—you do the math. We're buying our own property from ourselves, charging ourselves millions of dollars. It's also my understanding, and somebody could comment to this, if you guys could do your homework because you're very diligent workers up there—my understanding is that the Park District donated $16,000 out of the $1.5 million, $1.8 million, $1.2 million for this project and, in return, they got unlimited access for free when that's not being used by 87. They're laughing all the way to the bank. They just got $3,000,000 from us and then they get free use of the field that they just sold you. That's a good deal. So I just want to look into the history because I believe this is a bigger issue where we keep on selling things to ourselves. The Park District owns more school buildings than the School District does. And nice ones. Big ones.

Other note. I love the intergovernment agreements and cooperation. I don't see any inter—I see these guys trying to do what they want and then they have their lawyer put in a paragraph that says you guys can do your job and, at the end of the day, they are telling you flat out that they have the authority because they're governed by state regulatory—not municipal code at the end of the day, and they're going to do what they want. So I appreciate all your time, all your pointed questions You guys, if this is what you're teaching our kids to accept—more research and study and plans upfront, you should have got an F. You should have got an F and should have been fired. You guys for letting this go and rushing through record time by our Planning Commission; this is the biggest scam and, I'm sorry, 87 should be ashamed of themselves for coming in with this and you're still saying you've got more things that you're going to do but we'll address those later. Full disclosure, gentlemen. Put the plan on the table. Let it fly, sink or swim on its own merits. Don't do the one permit, two permits, three permits, future permits. Tell the people upfront what it is you're going to do. And people will

(MURPHY) (UNINTELLIGIBLE) organize (UNINTELLIGIBLE). Personally, I'm not either way. I'm more shaken at what's transpired than whether I have lights and whether the sidewalk goes here. I'm more shaken at the process and the fact that the fact that it was the people that are teaching our students. Did this (UNINTELLIGIBLE) never work? Accepted it from him and now we're up here going we don't know. Are we (UNINTELLIGIBLE) adaptation of the stormwater permit?

Another thing is I cannot believe you made a total impervious surface and your flow rates are going to be reduced. I'd love to see the math on that water equation so thank you so much for your time. I appreciate all your good hard efforts.

SWANSON You asked if anybody had any questions. I really don't have any questions and I appreciate your comments and your thoughts but I would like to state at this time in response to some of your concerns that our job as the Plan Commission is to consider only the requests for variations that we have before us. I raised the issue of the bags of dust as you called it simply out of curiosity because I didn't know where they were going to put them. I didn't realize that it was an overfill. We are not asked to consider the safety of this type of field, the appropriateness, the issues of dust. That's not what we're here to do. We're not here to even comment on, as our Chairman pointed out, on the light…potential lighting issues and we are not here to discuss or consider or really offer our own opinions about the parking issues and whether parallel parking or…or diagonal parking would be appropriate. So all I really want to…to make clear so you understand what we're doing is we're going to consider the variations that we have before us with regard to setbacks, the impervious surface and whether to allow an increase of 67 square feet in the accessory building area. So that's just so you know at the end of the day…

MURPHY I fully appreciate it. I understand what your guys' job is but that's why I'm harping on the simple fact of these boys got more tricks up their sleeve. They're only asking you for these four or five. Actually, this permit request that they asked for does talk about bleachers on the Crescent side. It's…bleachers are in both of the noted paragraphs where they're asking for variances. Bleachers appears in the first paragraph to allow bleachers on the Union Pacific side, and Item 4 to accommodate bleachers, concrete pads to accommodate bleachers, a dugout and stairs. Now I don't see anybody talking in this whole meeting tonight about the bleachers that

(MURPHY) they were going to come back later after they figure it out. I am mad as hell that these guys know exactly what they want to do and they're putting you guys in the very tough position to take them one little variance at a time when they know what their master plan is. In the business world, even in regulatory...regulatory law which is what I specialize in, they're not disclosing and that's why I am ashamed that these are the people teaching my children to...here's how you sneak something through a variance at a time and even there you guys had to catch them to say you need variances for this. They didn't do their job or if they did their job, they didn't have...they couldn't pass a red face to stand up here and say we knew about these variances and now we're asking for them. They're just saying, oh, we didn't know. It was built by volunteers and staff. There's no permit or record of these structures being built. The responses are so humorous, it's...it's...I'm glad I came down here tonight. It was fun. But it puts you guys in a very tough position. I appreciate and I know what you're here to do and I won't take any more of your valuable time. Thank you.

FULLERTON Thank you, sir. Ma'am, did you wish to speak? No? Any other members of the public? Yes, ma'am.

SECRETARY Would you please state your name and address for the public record?

PAGE Camille Page (of Glen Ellyn, Illinois).

(THE PARTY IS SWORN)

I just had a concern about the water issues and the per—or the impermeable surfaces. There's been so many advances in permeable pavements, permeable blocks, whatever. If there's any way to reconsider the current requests that they have for the bleacher pads to do something that would help with the water run-off and maybe reconsider it as something permeable especially since I think there's been trees taken out and the flooding issues now are different than the permits were in the 1990's. Things have changed a lot and if it's just something that could be considered that if you're going to do it, at least maybe make it a little bit more environmentally friendly. That's all. Thank you.

FULLERTON Thank you. Michele, just to be clear on that, when they…they did receive a stormwater permit and it was signed off by the Village Engineer.

STEGALL (UNINTELLIGIBLE)

FULLERTON I'm sorry?

STEGALL Yes, back in July.

FULLERTON I just want to make that clear. Thank you. Other members of the public?

(NO RESPONSE)

May I have a motion to close the public hearing?

SWANSON So moved.

FULLERTON Second?

MCCORMICK Second.

FULLERTON All in favor?

PLAN COMMISSIONERS Aye.

FULLERTON Okay. At this time, we will have deliberation, discussion and a vote. Anyone care to begin?

FRIEDBERG I'll go.

FULLERTON Okay.

FRIEDBERG So, overall, you know, I'm pretty sympathetic and supportive of the overall project that they're doing at Memorial Field and the…I probably do have to comment similar to some of the public comments about, you know, why this wasn't known and applied for at the time of submission. That does sort of bother me. The engineers should have been able to look at this. They should have been able to determine that our ordinances are written in black and white. They should have been able to apply and even if they weren't sure, should have been able to ask a question. And so I'm pretty disappointed in the process that the District did take in that, and I think that the paragraph

(FRIEDBERG) that they added sort of backs up that issue about we sort of didn't tell you that there was a variance that you needed, that we needed a variance and, by the way, we're going to put this paragraph in the application as well. Since this didn't sit very well, I think when it comes down to looking at the project itself, the dugouts, themselves, backing up against the south line because the south going up against the railroad tracks, it doesn't really interfere with any residential properties, I don't have an issue with the variance on that and I think the sidewalks and the stairwell from the Crescent Boulevard side are a feasible way to provide safety. So I'm actually okay with the request for a variance. I'm just disappointed in the process the District took in bringing it to us.

FULLERTON Okay. Thank you. Jay, what do you think?

STRAYER In a nutshell, I have no real issues at all with the variances. I think they're perfectly fine. Perhaps the Village Trustees, though, will want to address the language that was added by the School Board's legal counsel. I am really not very impressed with that language and felt it was confrontational and unnecessary. Certainly, it's not indicative of a spirit of intergovernment cooperation. We're very much aware—I know it's not the same thing but we're very much aware of the situation with COD and, to be quite frank about that, some of us are pretty appalled by it. So you may want to talk to your legal counsel about that sort of I'll call it a disclaimer being in a document like this and I just didn't think it was necessary at all.

I'm very disappointed that the requirement for variances was not recognized on a timely basis. I think that's a failure on the part of the professionals involved but I have no objection. Again, I have no objection against any of the variances. I think they're all perfectly acceptable, and I'll certainly vote for the variances as that's what our plan...the Plan Commission's job is but I would like to see the Trustees address those other two issues.

FULLERTON Thank you. Julie?

MCCORMICK Well, I have to say that when I walked the property, I was pleasantly surprised at the progress, and I think that you've done a great job with that unique parcel of land. I, myself, don't have any problems with the variances, themselves, but I do, like my fellow Commissioners, have stated, I just...there's

(MCCORMICK) just something a little underhanded about the way the whole process took place, and it just smells a little fishy but...and it's a little disconcerting.

Another comment that I just want to make is, you know, I guess I just don't understand if the accessory building was supposed to be built at 1,000 maximum, why can't you just design it and build it within our code. And is 67 square feet a huge deal? No, but it would be nice to see in good faith effort the organization try to build something within the rules and regulations that are set forth within the Village. But, again, I don't think any of these variations are out of the ordinary and I think I'm in favor of this.

FULLERTON Thank you. Len?

SWANSON With respect to the paragraph in the engineer's letter Mr. Strayer alludes to, the sentence that is troublesome is the one that reads, "The School District reserves its authority to the full extent permitted by law to improve Memorial Field as necessary to meet its program needs." Mr. Strayer is a lawyer. I, too, am a retired lawyer, and we play with words. And I suggest that the clause that says "to the full extent permitted by law" would suggest that the School Board really isn't going to go out and intentionally violate our Zoning Code or our ordinances and thumb their nose at the municipal regulations of the Village of Glen Ellyn. That's not permitted by law. Now you can read it a different way. As I say, lawyers play with words. Jay and I could have a good debate about this but I don't necessarily attribute, you know, nefarious purposes to the members of the school administration or the school board. And, likewise, with respect to the question of when the zoning petition should have been filed when the should have been sought, I haven't heard anything to suggest that anyone was trying to pull the wool over the Village's eyes or do something under the cover of darkness, and I think there was a mistake made. But I made one once a long time ago and I still remember it. So I'm not...I'm not willing to attribute bad motives without hearing a whole lot more on the subject. I think that if we look at the petition as if there's nothing on that land presently and ask ourselves would we grant this petition if it came into us with, you know, raw land out there, and I suggest that we would grant it without real hesitation.

The variations are being sought for structures that either are hundreds of feet away from Park Boulevard and residential

(SWANSON) areas or back up to the Union Pacific tracks which is a barrier between the school and the buildings across the tracks. When I first moved to Glen Ellyn, I lived in one of those apartment buildings and you don't even know the school or the play field is there. You know the railroad is there but you don't know what's on the other side of the railroad. So I don't see any... any reason why we would not have approved all of these variations if nothing were there. I think the small extension to the dugout...you know, when you look it on paper and you see 1,067 feet versus 1,000 feet, it sounds like a lot but there's a 6-foot extension to the existing...the dugout that they want to put in. And if you're going to store athletic equipment there, I think that's a perfectly reasonable request. Someone—a lady from the audience brought up the question of having a permeable surface for bleachers as opposed to the impervious surface. The evidence was submitted that these are going to be removable bleachers, portable bleachers, and it would seem to me that one of the considerations you would want to have when you're putting up portable bleachers is whether or not you really have a solid base or foundation on which to put them because if you put them on a permeable surface or some of these paver blocks with holes in them and they get mis-aligned where a leg drops down into them and you have a problem with stability of the bleachers. You've created a problem that you really don't want to have. So I don't know if that's the reason. I'm guessing it is but I think it would be a good reason to have a solid concrete footing for removable bleachers. So I'm in favor of the petition. I do think that this whole administration and its staff is on notice that maybe more care should be taken when planning projects to make full disclosure or run it by the Village to see if any variations or planned use developments are necessary.

FULLERTON Thank you. Ray?

WHALEN I think, first of all, concerning the building (UNINTELLIGIBLE), I think from other members, the Commission and the audience, I think, generally, engineers just look at engineering stuff in my experience and building plans or design is done by an architect or stuff and they don't always talk to each other and collaborate exactly what they're doing. That's why I asked the question if plans had been submitted because I think if they would have had a set of building plans for the dugouts and some of the other amenities, our Building Department, the people there, would have probably noticed it. So I think it was just a little bit of miscommunication, and

(WHALEN) we've seen that a lot in the past in building heights and I think our Building Department's done a good job of cleaning that up. This is kind of a unique application...unique process here so I don't personally think it was done at all intentionally by anybody involved. In the past, I've seen...I was here and was watching it on TV once when they came in months ago and did state to the Board and was looking for cooperation and asked...and actually asked how can we work together on improvements potentially in that area. So I definitely don't think that, in my opinion, that this was done with any (UNINTELLIGIBLE) behind the scenes and given the fact that, you know, that they're in here cooperating with our staff and submitting it very quickly, I think again shows me the direction that they're willing to work with us.

As far as the legal paragraph in there, I'm not an attorney and I don't want to comment on that but on the variations requested, I think, as Len had indicated, I would take it as a clean slate coming in here. I would have no problem approving these. I think one that has...has worked in the past Zoning Code review... we'd had to really focus a lot on the single-family residential area so some of the square footage and whatnot—1,000 square feet—you know, I do think is more geared or was primarily geared towards our residential end of our code and that we had felt that when this type of situation occurred that in a commercial district or CR that people would come to us for a request for a variation.

So, other than that, the rest of my...I think as Len had indicated, for the reasons he stated, are as inconsequential as the location and the whatnot, and I think if we step back and look at it, it really would be an asset and just driving by it again today, I personally think it's a good view as you come down that street. And now might not be the proper time but I would ask that you guys do look—whoever your general contractor—to try to protect the trees that are onsite there. I think they're a huge asset to the community and I think we have some...it's not up to the codes of our Forestry. There's a lot of equipment and things stored under those drip lines being moved and protect those trees so that they are around after you guys are completed with your (UNINTELLIGIBLE).

FULLERTON Thank you. Todd?

BUCKTON Like Ray, I'm not a lawyer either but the thing that stuck out with me is that paragraph. I thought that it was...it was

(BUCKTON) confrontational. I thought it was...it completely changed my mind about the variations. Yes, the variations are fine but then when I hear that you don't want to spend the money to have your lawyer come in for two hours tonight to explain what's going on for a $1.6 million dollar project, I, you know, I guess that if we needed to have another bake sale to pay for the lawyer, we could probably do that. I think that it's wrong. I would have liked to have talked to the lawyer about that and it's real simple—I'm not a lawyer but I'm not going to vote for it.

FULLERTON Craig?

BROMANN I guess everybody's got the same comments on that one paragraph. When I first read it, I found it rather threatening and it kind of put a bias in my thinking. There are a number of things about the project, itself, that concern us but that's not our charge. Our charge is to evaluate the variations and I find each one of the variations to be acceptable.

FULLERTON Okay. Heidi?

LANNEN I agree with the comments of the fellow Commissioners with respect to some of the (UNINTELLIGIBLE) and the approach but, overall, I think Memorial Park is going to be an asset to our community and having a child at West, I really think the current situation on Crescent Avenue is a safety issue today with the drop-off and just the congestion of all the kids crossing and all aspects of that parking and open field so I think a lot of the variations and improvements are really going to hone in and help with the overall safety issues in our community. So I'm in favor of the variations.

FULLERTON Jeff?

GIRLING I'm in favor as well, and I echo most of the comments that have been already said.

FULLERTON My turn. I don't really necessarily have anything different to add. I like the project as well. I've got two kids going to West in a couple of years. But I am very disappointed in the way that this was brought to us. I've been on the Plan Commission for a long time, as many of my fellow Commissioners have, and I'm trying to rack my brain for the last time somebody came in and applied for variances after they already started construction. And the question was asked over and over and

(FULLERTON) over again why wasn't...why weren't they applied for? I asked the question. Other people asked the question. I don't think we got an answer, and if the answer was as simple as we made a mistake, that would have been nice to hear. Somebody taking responsibility for that. I...I'm not saying I'm against the project simply because of that but I am disappointed in the way that this has been brought to us. I don't think there was necessarily a hardship proved for why the dugouts needed to be 100—I'm sorry—1,067 square feet versus 1,000 square feet but, again, I mean, I'm in favor of the project. I just am very frustrated with the way that it was brought to us and I hope in the future that if there are other variations that are going to be brought because of this project that they are brought to the Plan Commission before construction begins. And I'm not trying to say that there are any nefarious motives or somebody's doing this underhandedly because I don't know that. Somebody may have just made a mistake or it was overlooked. But I just want...we've all kind of commented on...I just want the petitioner to understand that there's some disappointment and some frustration on this Commission. That being said...

STEGALL There's been a lot of statements made about the paragraph , the zoning variation application and the confusion that's happened with the property so I just want to reiterate. We have really enjoyed a good working relationship with District 87 throughout the years and, you know, moving forward beyond this project, I have no reason to expect that that will not continue. We've worked collaboratively on a number of projects.

FULLERTON So, Barb, may we have a roll call, please?

SECRETARY We need a motion.

FULLERTON Oh, I'm sorry. We need a motion. Jeff? I've asked Jeff to read the motion.

GIRLING After conducting a public hearing and deliberating on the request of Glenbard High School District 87 for approval of zoning variations to allow improvements at Memorial Field, the Plan Commission hereby makes the following findings of fact. 1. The requested variations will not alter the essential character of the locality because the proposed use of the site would remain the same as the existing use. Proposed 1st and 3rd base line dugouts were present prior to current construction operations and will not alter the character of the site and the

(GIRLING) dugouts and 3rd base bleacher pad will be located along the existing railroad right-of-way, over 300 feet southeast of Crescent Boulevard. In addition, proposed accessory structures totaling 1,067 square feet in size would allow for on-site storage of athletic equipment, which is currently stored on site in plain view, providing for a better general appearance of the site. Impervious surfaces, including a sidewalk, stairs and paver path would allow for safe, field accessibility for students, staff and spectators and will not alter the site's character. 2. The petitioner has demonstrated a practical difficulty and particular hardship as a result of adhering to the strict letter of the regulations of the Zoning Code because: a. The limited area of the site and unique triangular-shaped parcel does not allow for the location of a proposed 3rd base line dugout and the 3rd base line bleacher pad outside of the required 30.5 foot impervious surface setback and 30.5 foot accessory structure setback. Limited site area is due to required safe play distances between a multi-purpose field and softball field, which in turn requires no overlap of differential surfaces in playing surfaces. b. A lengthy lot width along Park ROW (610 feet) results in a relatively large required setback distance around the perimeter of the entire site (including existing railroad right-of-way). c. An approximately 3-4 foot change in elevation between Crescent Boulevard and the athletic fields does not allow for ADA handicap accessibility to the field without the installation of the proposed sidewalk. The proposed sidewalk would extend from an existing handicap parking space, located at the school district's office/garage building at 671 Crescent Boulevard, to the proposed athletic fields. d. The main occupant of the property is located across the street/north of Crescent Boulevard. An existing 3-4 foot change in elevation between Crescent Boulevard and the athletic fields does not allow for safe pedestrian access from the existing Crescent Boulevard crosswalk to the field without the installation of stairs. e. The required 30.5 foot impervious surface setback does not allow for an ADA accessible, hard surface path extending from Crescent Boulevard to a proposed brick paver patio located at the west end of the athletic field. f. A maximum allowable freestanding accessory structure combined area of 1,000 square feet would not allow for a larger 1st base dugout. This slightly larger dugout would provide locked storage space for athletic equipment which is currently stored on-site in plain view. g. No more than one of each type of accessory structure would not allow the replacement of two dugouts and two dugouts were previously located along the 1st and 3rd base lines. 3. The property in question cannot yield a

(GIRLING) reasonable return if permitted to be used only under the conditions allowed by the regulations governing the district in which it is located because without the requested zoning variations, the site cannot yield a reasonable return as an athletic field due to a lack of student, staff, ADA and general public access issues referenced above and the lack of a 3rd base dugout and bleacher pad. 4. The plight of the owner is due to unique circumstances because the site is located across the street from Glenbard High School's main campus, limited site area due to an irregularly shaped parcel, differences in elevation between the public right-of-way and site and access issues.

The Commission also hereby adopts the remaining supplemental findings of fact included in the zoning variation application submitted by the petitioner and dated August 20, 2010. Based on these findings of fact, the Plan Commission recommends that the Village Board approve the following: A. A variation from Section 10-5-4(A)4 to allow a dugout to be constructed 9.8 feet from the south property line adjacent to the Union Pacific railroad in lieu of the minimum side yard setback of 30.5 feet required. B. A variation from Section 10-5-4(A)2 to allow a combined area of 1,067 square feet of freestanding accessory structures on the property in lieu of the maximum area of 1,000 square feet permitted. C. A variation from Section 10-5-4(A)3 to allow more than one of each type of accessory building to be located on the property. D. A variation from Section 10-5-5(C) to allow an impervious surface setback of as little as 0 feet in lieu of the minimum setback of 30.5 feet required. All subject to the following conditions: A. The project shall be constructed and maintained in substantial conformance with the plans as submitted and the testimony presented at tonight's meeting.

FULLERTON Thank you. Is there a second?

STRAYER Second.

FULLERTON Barb, may we have a roll call, please?

SECRETARY Commissioner Girling?

GIRLING Yes.

SECRETARY Commissioner Swanson?

| | |
|---|---|
| SWANSON | Yes. |
| SECRETARY | Commissioner Bromann? |
| BROMANN | Yes. |
| SECRETARY | Commissioner Buckton? |
| BUCKTON | No. |
| SECRETARY | Commissioner Friedberg? |
| FRIEDBERG | Yes. |
| SECRETARY | Commissioner Lannen? |
| LANNEN | Yes. |
| SECRETARY | Commissioner McCormick? |
| MCCORMICK | Yes. |
| SECRETARY | Commissioner Strayer? |
| STRAYER | Yes. |
| SECRETARY | Commissioner Whalen? |
| WHALEN | Yes. |
| SECRETARY | Chairman Fullerton? |
| FULLERTON | Yes. |
| SECRETARY | Nine yes, one no. Motion carries. |

Project Number: 210090.00

# MEMORIAL FIELD VARIANCE

## Glenbard West High School

670 Crescent Blvd., Glen Ellyn, Illinois 60137

Revision 2

RECEIVED
AUG 11 2011
PLANNING DEPARTMENT
VILLAGE OF GLEN ELLYN

GLENBARD TOWNSHIP HIGH SCHOOLS
VERITAS
1916

August 9, 2011

LEGATARCHITECTS
sustainability performance design

2015 Spring Road – Suite 175
Oak Brook, Illinois 60523–1811
Tel 630.990.3535 Fax 630.990.3541
www.legat.com

Glenbard Township High School District 87

Administration Center ▲ 596 Crescent Boulevard ▲ Glen Ellyn, Illinois 60137-4297 ▲ Phone: (630) 469-9100 ▲ Fax: (630) 469-9107

May 20, 2011 (Revision 1, July 25, 2011) (Revisions 2, August 9, 2011) VIA Hand Delivery

Ms. Staci Hulseberg
Planning and Development Director
Village of Glen Ellyn
535 Duane Street
Glen Ellyn, Illinois 60137

Re: Memorial Field – Application for Variance
671 Crescent Boulevard
Glen Ellyn, Illinois

Dear Ms. Hulseberg:

Glenbard Township High School District #87 recently constructed a synthetic turf surface at Memorial Field located at its Glenbard West campus. The enhancements to the site include: IHSA regulation multi-purpose synthetic field; softball field; detention; dugouts; bleacher pads; fencing; sidewalk & stairway access to the field; brick paver viewing area; and parking area improvements along Crescent Boulevard. Variances for these enhancements were approved by the Village of Glen Ellyn Board last summer. These enhancements have provided a durable, consistent and safe surface for students for physical education, athletic and other co-curricular uses.

As part of the campus master plan, future enhancements to Memorial Field will provide additional benefits to students and the school community. Installation of field lighting; seating with improved handicap accessibility; sidewalk enhancements for improved field access, batting cage renovations and an improved, more aesthetically pleasing gate & site entry way are among the planned enhancements.

Recent and proposed future enhancements increase the utilization of the field for our students. This is extremely important to the school for the following reasons: the West campus has very limited space for outdoor instructional and co-curricular use; the number and levels of athletic programs have increased dramatically over recent years; and District 87's Board of Education recently approved no-cut freshmen sports. Studies clearly show that engaged, involved students are successful students.

Enclosed is our revised Application for Variation associated with the above-referenced site. For ease of reference we have enclosed your August 5, 2011 review comments. We have annotated the letter and have indicated where each item has been addressed in our revised application. Please see Exhibit O.

Based on the Village's zoning review findings, the School District is requesting approval of variations referencing the following zoning code sections:

1. A variation from Section 10-5-5(B)4(3) of the Zoning Code to allow an ornamental gate with a height of 14 feet in lieu of the maximum height of 10 feet permitted.

2. A variation from Section 10-5-5(B)4(11) to allow a fence along Crescent Boulevard with a height of 6 feet 6 inches in lieu of the maximum height of 4 feet permitted.

3. A variation from Section 10-5-5(B)4(32) of the Zoning Code to allow a batting cage with a setback of 1 foot from the southern property line in lieu of the minimum setback of 58.14 feet required.

4. A variation from Section 10-5-5(C)1 of the Zoning Code to allow an impervious surface setback of as little as 7.5 feet for a proposed sidewalk along the southern property line and 0 feet to accommodate the base for the bleachers proposed along the northern property line in lieu of the minimum impervious surface setback of 29.07 feet required.

5. A variation from Section 10-5-4(A)2(a) to allow a total of 4,268 square feet of accessory structures on the property in lieu of the maximum of 1,000 square feet of accessory structures permitted. *(amendment to previous variation approved by Ordinance 5888 which permitted 1,068 square feet of accessory structures on the property and being requested to accommodate proposed bleachers)*

6. Variations from Sections 10-5-4(A)4(a) and 10-5-4(A)4(c) of the Zoning Code to allow the northern bleachers to be located 0 feet from the northern property line in lieu of the minimum 18 foot and 29.07 foot accessory structure setbacks required.

7. A variation from Section 10-5-13(M)2(b)1 of the Zoning Code to allow 70 foot tall light poles to be spaced as close as 210 feet apart in lieu of the minimum separation of 280 feet required; to allow 70 foot tall and 60 foot tall light poles to be spaced as close as 106 feet apart in lieu of the minimum separation of 260 feet required; to allow 60 foot tall light poles to be spaced as close as 78 feet apart in the lieu of the minimum separation of 240 feet required; and to allow 60 foot tall and 70 foot tall light poles to be spaced as close as 23 and 37 feet apart respectfully from the existing 30 foot tall tennis court light poles in lieu of the minimum separation of 180 feet and 200 feet required.

8. A variation from Section 10-5-13(M)2(a)2 of the Zoning Code to allow foot-candle levels as high as 8.49 along the southern property line and 7.32 along the northern property line in lieu of the maximum foot-candle level of 3.0 permitted.

9. A variation from Section 10-5-13(M)2(c) to allow the height of the proposed light poles to exceed the height of the principal building on the site.

10. Any other zoning relief necessary to construct the project as depicted on the plans presented and available for public review or necessary to accommodate changes requested by the Plan Commission or Village Board.

Enclosed please find one copy of each of the following documents:

- $500 Zoning Application Fee and $5,000 Escrow Fee **(Previously submitted)**
- Narrative Statement/ Use Description/ Use Documentation **(Revised 8/9/2011)**
- Proof of Ownership (recorded deed)
- Disclosure of Interest
- Zoning Variation Application **(Revised 8/9/2011)**
- Reimbursement of Fees Agreement **(Previously Submitted)**

- Light Usage - Exhibit A
- Legal Description - Exhibit B
- Quantitative Summary – Exhibit C **(Revised 8/9/2011)**
- Section V: Evidence Related to Zoning Code Standards for a Variation – Exhibit D
- Comparative Data – Exhibit E
- Storm Water Management Letter/ Report – Exhibit F **(Previously Submitted: not included)**
- Lighting Cut Sheets & Photometric Plans – Exhibit G **(updated)**
- Proposed Time Line – Exhibit H
- Bleacher Section, Plan & Rendering – Exhibit I
- Crescent Boulevard Safety Enhancements & Rendering – Exhibit J
- Memorial Site Plan – Requested Variances – Exhibit K **(Revised 8/9/2011)**
- Existing Landscaping Pictures – Exhibit L
- Light Shield Images – Exhibit M
- James J. Benes and Associates, Inc. Memorandum, Dated July 25, 2011 – Exhibit N
- Village of Glen Ellyn Review Letter, Dated 6/24/2011, with comments – Exhibit O
- Attendance – Exhibit P **(New)**
- Plat of Survey – Enclosed Drawing
- Existing Conditions Plan (see Plat of Survey)
- Site Plan (Dimensional Control and Paving plan with fencing and bleachers (Drawings C1 and C5) **(Revised 8/9/2011)**

Please feel free to contact me if you have any questions or if you need additional information.

Sincerely,

Chris McClain

Chris McClain
Assistant Superintendent for Business Services
GLENBARD TOWNSHIP HIGH SCHOOL DISTRICT 87

ATTACHMENTS See Above

CC Michele Stegall, Village Planner, Village of Glen Ellyn
Bob Verisario, Glenbard Township H.S. District 87
Patrick Brosnan, Legat Architects (via email)
Paul J. Pessetti, Legat Architects (via email)

FILENAME Variance Cover Letter 080911.doc

**Village of Glen Ellyn**
**Planning and Development Department**

**Project Submittals List**

**Subject:** Memorial Field **Date:** 8/9/2011

**Address:** 671 Crescent Boulevard

**PIN(s):** 05-11-410-014

| Applications/Fees/Escrow | (X) If Required | Fee |
|---|---|---|
| 1. Special Use Permit | | |
| 2. Special Use for a Planned Unit Development | | |
| 3. Subdivision | | |
| 4. Exterior Appearance | | |
| 5. Zoning Variations | x | $500.00 |
| 6. Sign Variations | | |
| 7. Stormwater (values & tabs format) | | |
| 8. Other | | |
| 9. Escrow | x | $5,000.00 |

| Submission Materials | Yes | No |
|---|---|---|
| 10. Cover Letter Listing Attachments | x | |
| 11. Narrative Statement/Use Description | x | |
| 12. Proof of Ownership | x | |
| 13. Disclosure of Interest | x | |
| 14. Affidavit of Authorization | x | |
| 15. Reimbursement of Fees Agreement | x | |
| 16. Quantitative Summary | x See Exhibit C | |
| 17. List of Variations/Deviations | x See Exhibit C | |
| 18. Practical Difficulties or Particular Hardship (sign variations) | | |
| 19. Plat of Survey/Legal Description | x See Drawings | |
| 20. Existing Conditions Plan | x See Drawings | |
| 21. Surrounding Conditions Plan | | |
| 22. Site Plan | x See Drawings | |
| 23. Landscape Plan (including size and condition of any trees to be removed) | x Not Applicable | |
| 24. Tree Survey & Analysis | | |
| 25. Building Elevation Drawings (4-sides) | | |
| 26. Color Rendering | | |
| 27. Floor Plan | | |
| 28. List of Building Materials and Colors | | |
| 29. Material & Color Samples (bring to meeting) | | |
| 30. Light Fixture Cut Sheets | x See Exhibit G | |
| 31. Photometric Plan | x See Exhibit G | |
| 32. Sign Elevations | | |
| 33. Sign Plan | | |
| 34. Trash Enclosure/Exterior Equipment/Fences/Screening | x See Exhibit I | |
| 35. Plat of Consolidation | | |
| 36. Preliminary Plat of Subdivision | | |
| 37. Final Plat of Subdivision | | |
| 38. Final Site Plan (if two step review) | | |
| 39. Traffic Impact Study | | |
| 40. Grading Plan (if 1,500 sq. ft. or more area is disturbed) | if changes proposed | See Drawings |
| 41. Utilities Plan | | |
| 42. Road Plans/Details | | |
| 43. Public Improvements List | | |
| 44. Public Improvements Cross-sections | | |
| 45. Deed/Easement Agreements | | |
| 46. Statement of Compliance/Engineer's Certification | | |
| 47. Construction/Phasing Schedule | x See Exhibit H | |
| 48. Letters from Governmental Units/Developer's Donations | | |
| 49. Letter of Authorization to Record Plats | | |
| 50. Land Use Opinion (Kane-DuPage S & WCD) | | |
| 51. Environmental Impact Study | | |
| 52. IDNR Endangered Species Consultation | | |
| 53. Soil Boring/Seepage Test Covenants, Conditions, Restrictions | | |
| 54. Petition for Annexation | | |
| 55. Annexation Agreement | | |
| 56. Plat of Annexation | | |

57. Other: Exhibits A through F; Lighting Usage Charts (A), Legal Description (B), Quantitative Summary/ List
58. Other: of Variations (C), Variance Evidence Section V (D), Musco Project List (E), Storm Water Report (F)



Revised Parking Layout/ Signage/ Rendering (J) Variance Drawing (K), Stormwater Report Previously Submitted, Exist. Landscape (L), Light Shield Images (M), L Bence Memo (N), Annotated Village Review (O), Attendance (P)

Glenbard Township High School District 87

Administration Center ▲ 596 Crescent Boulevard ▲ Glen Ellyn, Illinois 60137-4297 ▲ Phone: (630) 469-9100 ▲ Fax: (630) 469-9107

GLENBARD WEST HIGH SCHOOL – MEMORIAL FIELD
GLEN ELLYN, ILLINOIS
May 20, 2011(Revision 1, July 25, 2011)(Revision 2, August 9, 2011)

**NARRATIVE STATEMENT/ USE DESCRIPTION:**

The subject property consists of two parcels of land, totaling approximately 8.1 acres of land, located on the south side of Crescent Boulevard, between Park Boulevard and Park Row, within the Village of Glen Ellyn, Illinois. The site is bound to the north by Crescent Boulevard, to the east by Park Row and to the south by the Chicago & Northwest Railroad (C&NW RR). The east portion of the site is currently occupied by tennis courts, a school district office/garage building and basketball court. The west portion of the site is currently vacant and undeveloped. The central portion of the site is currently occupied by a synthetic turf athletic field, skinned softball field and dugouts. A description of requested variations including an identification of zoning code provisions from which variations are sought are provided below. Please refer to our enclosed Quantitative Summary and Section V of our *Application for Variation* for additional information.

**BACKGROUND INFORMATION:**

District 87 recently installed a synthetic turf field at the Memorial Park site. This installation provides our students and community with a multi-purpose IHSA regulation field. This project was collaboratively funded by District 87, the Glen Ellyn Park District, Glenbard West Boosters and our community at large. This improvement increases field utilization and safety. Memorial Field is used for Glenbard West physical education classes, athletic programs and our marching band. Through an Intergovernmental Agreement with the Glen Ellyn Park District, the field will also be used for park district programs under the terms of the agreement.

District 87 Administration believes that additional enhancements at Memorial Field will provide even more value to the school and community. The enhancements that have been identified as part of the master plan are:

- Field lighting
- 3rd base sideline sidewalk/ ramp
- North side bleachers
- Masonry fence
- Batting cage renovations

Field lighting at Memorial Field provides for an increased number of athletic practices and competitions for our students on campus, lessening the need for busing students off-site to other field locations. Keeping our students on campus provides a better school experience. In addition, less busing allows the district to save significant transportation costs. D87 will still need to transport students off-site due to the fact that demand for field space is greater than the supply of fields on campus. Increasing field usage maximizes our financial investment in the turf and provides for a better experience for our students.

The addition of these improvements will have a limited impact on the surrounding area. The attached plans establish that there is no measurable illumination on residential properties. Events will be programmed up to 9 pm, with grace period requested to 9:30 pm. We propose that lights would be used 9 months of the year and would not be in use on Sundays throughout the year (see Exhibit A). The intended use of the field is for practices and competitive events for less attended sports, such as field hockey, lacrosse, JV football Based on the intended use of the field (see Exhibit P) Parking and traffic flow will be minimal and accommodated.

**Lights have been discussed for some time:**

The District 87 Board of Education and Administration have been discussing the need for lights at Memorial Field for well over 2 years:

- **January 2009:** D87 Board of Education passed resolution that referenced lights at Memorial Field.
- **April 2009:** Agreement with 'Gain Ground' and Partnership for Educational Progress (PEP) referenced lights at Memorial Field.
- **June 2010:** Bid award document for the Memorial Field synthetic turf included underground electrical scope of work for future lights, which was in fact, implemented.

**Community members have had opportunity for input:**

District 87 representatives presented information and provided community members the opportunity to provide feedback regarding the proposed enhancements to Memorial Field as follows:

- Community Forum: January 20, 2011
- Board of Education Meeting: January 24, 2011
- Board of Education Meeting: February 7, 2011
- Board of Education Meeting: February 22, 2011
- Board of Education Meeting: March 7, 2011
- Board of Education Meeting: March 21, 2011
- Board of Education Meeting: April 11, 2011

Further, District Administrators met on two occasions (March 17 & April 14) with a community group by the name of "Our Field, Our Town" to hear concerns and present information.

In addition, the school district intends on holding a public hearing with the community in the near term, consistent with the Intergovernmental Agreement with the Village of Glen Ellyn.

**Many community concerns have been addressed:**

**Safety:** Concerns were raised regarding safety on Crescent Boulevard. Recent solutions have been implemented as follows:

- Parallel parking established on south side of Crescent Boulevard
- Student walk path established parallel to Memorial Field fence
- Designated student drop off zone established
- Signage implemented: Student Drop Off Zone; Parallel Parking Only; Cross at Crosswalks Only; No Parking from 7:00 am to 3:30 pm; Additional no U-turn signs installed
- Permits for crosswalk beacons have been approved by the Village and beacons have been ordered. We are working with Village of Glen Ellyn staff regarding location, installation and functionality. District 87 is absorbing the cost of this safety enhancement.

All solutions were implemented with approval from the Village of Glen Ellyn Police Chief – engineering diagrams and architectural renderings were provided to village personnel. Many of these solutions are consistent with the future plan for Crescent Boulevard, per the engineering study provided by Burns and McDonnell. Prior to these recent improvements, District 87 worked with the Village of Glen Ellyn to realize these additional safety improvements and/or initiatives referenced below:

- **May 2009:** District 87 requested that a school safety speed zone be implemented and enforced by Village of Glen Ellyn, supported by signage. Village of Glen implemented in May 2009.
- **January 2010:** District 87 Administration presented Crescent Boulevard safety study to Village of Glen Ellyn Board of Trustees for their review and comment at public meeting. Board made favorable comments regarding the study and the related scenarios.
- **February 2010:** Glen Ellyn Board of Trustees approved official engineering study of Crescent Boulevard ($44K) with the intent to submit an application to DuPage County Mayor & Managers Program for funding through the Surface Transportation Project (STP). Note: District 87 engineering consultant worked closely with village engineer to ensure that Memorial Field location and elevations align with future Village of Glen Ellyn Crescent Boulevard improvement plan.
- **August 2010:** Village of Glen Ellyn engineering study completed and village submitted application to DuPage Mayor & Managers Program.
- **September 2010:** District 87 improved south side of Crescent Boulevard - Graded parking area; installed aggregate asphalt and parking blocks for designated, angled parking spaces. Met w/ Village of Glen Ellyn Administration to discuss interim steps to further improve Crescent Boulevard Safety:
    - Crossing Point - defined & delineated student crossing point at intersection of Ellyn Avenue: Village painted crossing area on boulevard
    - Crossing Supervision – All physical education classes escorted by physical education staff (Biester Gym to Memorial Field & back)
    - Crossing Zone Enhancements (Raised crosswalk; Flashing lights; etc.) – Village will explore various enhancements to further improve crossing zone areas
- **December 2010:** DuPage County Mayor & Managers denies Village of Glen Ellyn Crescent Boulevard funding request in the initial round. Village intends on resubmitting application for next year's funding cycle. See attached Exhibit J for drawings related to the District 87 parking improvements.

**Lights**:

- **Lighting Plan:** D87 has optimized its lighting plan at Memorial Field. The plan provides for::
    - Total poles = 6 (4 poles 70' in height; 2 poles 60' in height) Lamps = 35
    - Minimal light spill at Crescent Boulevard center line, specifically less than 1.0 foot candle at the center line of the street.
    - No measurable light spill on neighbor's properties.
    - Properly lit field of play – 32.7 foot candle average; 1.68 to 1 uniformity

- **Time of Day Use:** D87 original proposal was to have lights on until 10:00 pm. We have listened to community concerns and our current proposal is to program evening events until 9:00 pm, with authorization to keep lights on until 9:30 pm. Lights will be turned off earlier if field is not in use. We respect our neighbors and will not have lights on Sunday evenings. Please refer to the enclosed usage schedule, Exhibit A. Further, the school district is open to reviewing summer usage for lights as well. These restrictions will be incorporated into D87 Board Policy.

We were pleased to receive the recent report from the Village of Glen Ellyn's lighting consultant, James J. Benes and Associates Inc. dated July 25, 2011. The report indicates the following key points and is enclosed as Exhibit N.

- Impacts to Vehicular Traffic on Crescent Boulevard: "The light spill from the proposed athletic field lighting will bring the illumination levels on the pavement up to a recommended level while the potential for pedestrian crossings is highest, and will not have a negative impact on passing motorists."

- Impacts to Neighbors: "It does not appear that the proposed lighting system will provide any measurable illumination on any residential properties."
- Lighting Levels for Fields: The report indicates that the field lighting is appropriate and adequate.

**Noise:** District 87 will not install a permanent sound system at the Memorial Field site. District 87 will use a portable sound system for national anthem and student introductions, no play by play commentary. Third party users will not be allowed to bring sound systems to the field for their events.
These restrictions will be incorporated into D87 Board Policy.

**Authorized User Groups:** D87 will limit Memorial Field usage with lights to:

- Glenbard D87 students (curricular & extra-curricular use)
- Glenbard D87 community youth athletic programs
- Glen Ellyn Park District per Intergovernmental Agreement
- Other 3rd Party Users – Requires approval from Superintendent as the Board of Education designee; The school district is open to limiting the number of 3rd party rental activity.
  These restrictions will be incorporated into D87 Board Policy

**Funding:** Lights will be funded 100% by community group donations and/or Glen Ellyn Park District through Intergovernmental Agreement. Other site capital improvements will be prioritized and funded via D87 capital improvement project planning. Note: Utility costs to operate lights will cost less than $5 per hour.

District 87 believes that it has been very open and transparent regarding this initiative. We have had numerous opportunities for public feedback. We also believe that we have listened and have made modifications to our plan to accommodate many of the concerns raised. In summary, we need to balance the needs of the school and the community and feel confident that we have achieved that. We look forward to working with the Village of Glen Ellyn to deliver a solution that will enhance the Glenbard West campus and school community, at large.

REQUESTED VARIANCES: (refer to Exhibit K and drawings for additional information)

1. A variation from Section 10-5-5(B)4(3) of the Zoning Code to allow an ornamental gate with a height of 14 feet in lieu of the maximum height of 10 feet permitted.

2. A variation from Section 10-5-5(B)4(11) to allow a fence along Crescent Boulevard with a height of 6 feet 6 inches in lieu of the maximum height of 4 feet permitted.

3. A variation from Section 10-5-5(B)4(32) of the Zoning Code to allow a batting cage with a setback of 1 foot from the southern property line in lieu of the minimum setback of 58.14 feet required.

4. A variation from Section 10-5-5(C)1 of the Zoning Code to allow an impervious surface setback of as little as 7.5 feet for a proposed sidewalk along the southern property line and 0 feet to accommodate the base for the bleachers proposed along the northern property line in lieu of the minimum impervious surface setback of 29.07 feet required.

5. A variation from Section 10-5-4(A)2(a) to allow a total of 4,268 square feet of accessory structures on the property in lieu of the maximum of 1,000 square feet of accessory structures permitted. *(amendment to previous variation approved by Ordinance 5888 which permitted 1,068 square feet of accessory structures on the property and being requested to accommodate proposed bleachers)*

6. Variations from Sections 10-5-4(A)4(a) and 10-5-4(A)4(c) of the Zoning Code to allow the northern bleachers to be located 0 feet from the northern property line in lieu of the minimum 18 foot and 29.07 foot accessory structure setbacks required.

7. A variation from Section 10-5-13(M)2(b)1 of the Zoning Code to allow 70 foot tall light poles to be spaced as close as 210 feet apart in lieu of the minimum separation of 280 feet required; to allow 70 foot tall and 60 foot tall light poles to be spaced as close as 106 feet apart in lieu of the minimum separation of 260 feet required; to allow 60 foot tall light poles to be spaced as close as 78 feet apart in the lieu of the minimum separation of 240 feet required; and to allow 60 foot tall and 70 foot tall light poles to be spaced as close as 23 and 37 feet apart respectfully from the existing 30 foot tall tennis court light poles in lieu of the minimum separation of 180 feet and 200 feet required.

8. A variation from Section 10-5-13(M)2(a)2 of the Zoning Code to allow foot-candle levels as high as 8.49 along the southern property line and 7.32 along the northern property line in lieu of the maximum foot-candle level of 3.0 permitted.

9. A variation from Section 10-5-13(M)2(c) to allow the height of the proposed light poles to exceed the height of the principal building on the site.

10. Any other zoning relief necessary to construct the project as depicted on the plans presented and available for public review or necessary to accommodate changes requested by the Plan Commission or Village Board.

*Note: 29.07' setback referenced above was determined based on 5% of lot width (581.34') along Park Row.

In the spirit of intergovernmental cooperation, the School District submits this application for review and consideration by the Village. The School District reserves its authority, to the full extent permitted by law, to improve Memorial Field as necessary to meet its program needs, should the variance process or result unduly restrict the District from meeting such needs. The School District, however, believes it is in the best interest of the taxpayers of both public bodies to work cooperatively on these variance issues.

Proof of Ownership

QUIT CLAIM DEED

MAIL TO:
Brian P. Crowley
Franczek Radelet P.C.
300 S. Wacker Drive, Ste. 3400
Chicago, Illinois 60606
Grantee

TAYPAYER:
Glenbard Township High School District #87
596 Crescent Boulevard
Glen Ellyn, IL 60137

FRED BUCHOLZ
DUPAGE COUNTY RECORDER
SEP.08,2009 RHSP 10:27 AM
QCD 05-11-410-014
002 PAGES R2009-138895

THE GRANTORS: **Village of Glen Ellyn**, an Illinois Municipal Corporation, County of DuPage, State of Illinois, for and in consideration of TEN and NO/100 dollars ($10.00), in hand paid, CONVEY and QUIT-CLAIM to: **Board of Education, Glenbard Township High School District Number 87**, DuPage County, Illinois, with reservation to right in the Village of Glen Ellyn to lay and maintain sewer pipes and right of way therefor per deed recorded as document number 218876, County of DuPage, State of Illinois, all interest in the following described Real Estate situated in the County of DuPage, in the State of Illinois, to wit:

PARCEL 1: LOT 17 IN COUNTY CLERK'S THIRD ASSESSMENT DIVISION, IN SECTION 11, TOWNSHIP 39 NORTH, RANGE 10, EAST OF THE THIRD PRINCIPAL MERIDIAN, ACCORDING TO THE PLAT THEREOF RECORDED JULY 3, 1906 AS DOCUMENT 88053, IN DUPAGE COUNTY, ILLINOIS.

PARCEL 2: ALL OF BLOCK 6 IN WOODTHORP, BEING A SUBDIVISION IN THE SOUTHEAST ¼ OF SECTION 11, TOWNSHIP 39 NORTH, RANGE 10, EAST OF THE THIRD PRINCIPAL MERIDIAN, ACCORDING TO THE PLAT THEREOF RECORDED JUNE 2, 1926 AS DOCUMENT 214660, IN DUPAGE COUNTY, ILLINOIS.

Subject to: General real estate taxes not due and payable at the time of closing; covenants, conditions and restrictions of record; building lines and easements, if any, so long as they do not interfere with the current use and enjoyment of the real estate.

Permanent Index Number (PIN): 05-11-410-014-0000
Address of Real Estate: 671 Crescent Blvd, Glen Ellyn, Illinois 60137

DATED this 26 day of May, 2009.

Village of Glen Ellyn, an Illinois Municipal Corporation

By: _____ (SEAL)
Mark Pfefferman, Village President

By: Andrea Draths (SEAL)
Andrea Draths, Village Clerk

Village of Glen Ellyn
Real Estate Transfer Tax
13121
5-27-09

NO CHARGE C.T.I.C. DUPAGE

2

STATE OF ILLINOIS )
) SS.
COUNTY OF DUPAGE)

I, the undersigned, a Notary Public in and for said County and State aforesaid, DO HEREBY CERTIFY, that **Mark Pfefferman**, President of the Village of Glen Ellyn, an Illinois municipal corporation, and **Andrea Dratha**, Clerk for the Village of Glen Ellyn, personally known to me to be the same persons whose names are subscribed to the foregoing instrument, appeared before me this day in person and acknowledged that they signed, sealed and delivered the said instrument as the free and voluntary act of said municipal corporation, and as their free and voluntary act, for the uses and purposes therein set forth.

Given under my hand and Notarial Seal, this 26th day of May, 2009.

Commission expires May 6, 2012

Staci Hulseberg
NOTARY PUBLIC

"OFFICIAL SEAL"
STACI R. HULSEBERG
Notary Public, State of Illinois
My Commission Expires 05/06/12

IMPRESS SEAL HERE

NAME and ADDRESS OF PREPARER:
Jeanne T. Goshgarian, Esq.
175 E. Hawthorn Parkway, Suite 145
Vernon Hills, Illinois 60061
847/247-7400

EXEMPT UNDER PROVISIONS OF PARAGRAPH
e, SECTION 4,
REAL ESTATE TRANSFER ACT
DATE: August 27, 2009
Jeanne Goshgarian
Signature of Buyer, Seller or Representative

S:\Goshgarian\Real Estate\Glen Ellyn\Sale of Memorial Park to School Dist\Closing documents\Quit Claim Deed.DOC 3146324.0161

Glenbard Township High School District 87

Administration Center ▲ 596 Crescent Boulevard ▲ Glen Ellyn, Illinois 60137-4297 ▲ Phone: (630) 469-9100 ▲ Fax: (630) 469-9107

GLENBARD WEST HIGH SCHOOL – MEMORIAL FIELD
GLEN ELLYN, ILLINOIS
May 20, 2011 (Revised, July 25, 2011)

**DISCLOSURE OF INTEREST:**

SCHOOL DISTRICT BOARD OF EDUCATION

RICHARD HEIM, President
ROSE MALCOM, Vice President
ROBERT FRIEND
F. THOMAS VOLTAGGGIO,
YADAV NATHWANI
THOMAS TREFILEK
MARY OZOG

DR. MICHAEL MEISSEN, Superintendent

**VILLAGE OF GLEN ELLYN**
**535 Duane Street**
**Glen Ellyn, Illinois 60137**
**(630) 547-5250**

# APPLICATION FOR VARIATION

---

Note to the Applicant: This application should be filed with, and any questions regarding it, should be directed to the Director of the Village Planning and Development Department.

---

The undersigned hereby petitions the Village of Glen Ellyn, Illinois, for one or more variations from the Glen Ellyn Zoning Code (Ordinance No. 3617-Z, as amended), as described in this application.

I. APPLICANT INFORMATION:

(Note: The applicant must comply with Section 10-10-10(B) of the Zoning Code).

Name: Glenbard Township High School District 87

Address: 596 Crescent Blvd., Glen Ellyn, Illinois 60137

Phone No.: 630-469-9100

Fax No.: 630-469-9107

E-mail: bob_verisario@glenbard.org/ chris_mcclain@glenbard.org

Ownership Interest in the Property in Question: _____

Glenbard Township High School District 87

II. INFORMATION REQUIRED BY SECTION 10-10-10(B) OF THE ZONING CODE, IF APPLICABLE:

NOTE: All parties, whether petitioner, agent, attorney, representative and or organization et al. must be fully disclosed by true name and address in compliance with Section 10-10-10(B) of the Zoning Code. Disclosure forms are attached for your convenience.

Name and address of the legal owner of the property (if other than the applicant):
see applicant information

Name and address of the person or entity for whom the applicant is acting (if the applicant is acting in a representative capacity):
N/A

Is the property in question subject to a contract or other arrangement for sale with the fee owner? (Circle "Yes" or "No")

YES NO

If YES, the contract purchaser must provide a copy of the contract to the Village and must either be a co-petitioner to this application or submit the attached Affidavit of Authorization with the application packet.

Is the property in question the subject of a land trust agreement? (Circle "Yes" or "No")

YES NO

If YES, (1) either the trustee must be a co-petitioner or submit the attached Affidavit of Authorization from the trustee to represent the holders of the beneficial interests in the trust and (2) the applicant must provide a trust disclosure in compliance with "An Act to Require Disclosure of All Beneficial Interests", Chapter 148, Section 71 et seq., Illinois Revised Statutes, signed by the trustee.

## III. PROPERTY INFORMATION:

Common address: 671 Crescent Blvd., Glen Ellyn, Illinois 60137

Permanent tax index number: 05-11-410-014

Legal description: see attached Exhibit B

Zoning classification: CR (Conservation/ Recreation)

Lot size: +/- 1,516 ft. x +/- 610 x +/- 1,355 ft Area: 353,466 sq. ft.

Present use: Site is currently occupied by athletic fields, dugouts, tennis courts and the District's facilities office/ garage.

## IV. INFORMATION REGARDING THE VARIATION(S) REQUESTED:

Description of the variation(s) requested (including identification of the Zoning Code provisions from which variation is sought) and proposed use(s):
see attached Quantitative Summay - Exhibit C

Estimated date to begin construction: T.B.D.

Names and addresses of any experts (e.g., planner, architect, engineer, attorney, etc.):
Mark Zaprzalka/ Bill Bohne, Jacob & Hefner Assoc., 1901 S. Meyers Road #180
Oak Brook Terrace, IL 60181
Paul Pessetti, Legat Architects, 2015 Spring Road, Suite 175, Oak Brook, IL 60523
Patrick Brosnan, Legat Architects, 2015 Spring Road, Suite 175, Oak Brook, IL 60523
Todd Faulkner, Franczek Radelet, 300 South Wacker Drive, Suite 3400, Chicago, IL 60606

## V. EVIDENCE RELATING TO ZONING CODE STANDARDS FOR A VARIATION:

The following items are intended to elicit information to support conclusions by the ZBA or PC and the Village Board that the required findings/standards for a variation under the Zoning Code have been established and met. Therefore, please complete these items carefully.

Additional Experts:
Brian Crowley, Franczek Radlet, 300 South Wacker Drive, Suite 3400, Chicago, IL 60606
David Miller, Muscoc Sports Lighting, 100 1st Avenue West, P.O. Box 808, Oskaloosa, IA 52577
Ryan Marsh, Muscoc Sports Lighting, 100 1st Avenue West, P.O. Box 808, Oskaloosa, IA 52577
Michael S. MaRous, MAI, CRE, MaRous & Company, 300 South Northwest Highway, Suite 204
Park Ridge, Illinois 60068

A. Standards Applicable to All Variations Requested:

1. Provide evidence that due to the characteristics of the property in question, there are practical difficulties or particular hardship for the applicant/owner in carrying out the strict letter of the Zoning Code:
See Attached Exhibit D

2. a. Provide evidence that the property in question cannot yield a reasonable return if permitted to be used under the conditions allowed by the Zoning Code (i.e., without one or more variations):
See Attached Exhibit D

OR

b. Provide evidence that the plight of the applicant/owner is due to unique circumstances relating to the property in question:
See Attached Exhibit D

3. Provide evidence that the requested variation(s), if granted, will not alter the essential character of the locality of the property in question:
See Attached Exhibit D

B. For the purpose of supplementing the above standards, the ZBA or PC, in making its recommendation that there are practical difficulties or particular hardships, shall also take into consideration the extent to which the evidence establishes or fails to establish the following facts favorably to the applicant:

1. Provide evidence that the particular physical surroundings, shape or topographical condition of the property in question would bring particular hardship upon the applicant/owner as distinguished from a mere inconvenience if the strict letter of the Zoning Code were to be carried out:
See Attached Exhibit D

2. Provide evidence that the conditions upon which the petition for variation is based would not be applicable generally to other property within the same zoning district:
See Attached Exhibit D

3. Provide evidence that the purpose of the variation is not based exclusively upon a desire to make more money out of the property in question:
See Attached Exhibit D

4. Provide evidence that the alleged difficulty or particular hardship has not been created by any person presently having an interest in the property in question or by the applicant.
See Attached Exhibit D

5. Provide evidence that the granting of the variation will not be detrimental to the public welfare or injurious to other property or improvements in the neighborhood in which the property in question is located
See Attached Exhibit D

6. Provide evidence that the proposed variation will not:

   a. Impair an adequate supply of light and air to adjacent property;
   See Attached Exhibit D

   b. Substantially increase the hazard from fire or other dangers to the property in question or adjacent property;
   See Attached Exhibit D

   c. Otherwise impair the public health, safety, comfort, morals or general welfare of the inhabitants of the Village;
   See Attached Exhibit D

d. Diminish or impair property values within the neighborhood;
See Attached Exhibit D

e. Unduly increase traffic congestion in the public streets and highway;
See Attached Exhibit D

f. Create a nuisance; or
See Attached Exhibit D

g. Results in an increase in public expenditures.
See Attached Exhibit D

7. Provide evidence that the variation is the minimum variation that will make possible the reasonable use of the land, building or structure.
See Attached Exhibit D

8. Please add any comments which may assist the Zoning Board of Appeals of Appeals in reviewing this application.
See Attached Exhibit D

## VI. EVIDENCE RELATING TO FLOOD HAZARD VARIATION REQUESTS

The following items must be completed only if the requested variation is from Chapter 6 of the Zoning Code (relating to Flood Hazard Land Use Regulations.) If no such variation is being requested, the applicant should skip this section and complete Section VII below.

A. Items applicable only to variation requested from the requirements of Chapter 6 of the Zoning Code (relating to Flood Hazard Land Use Regulations) that, if granted, would result in a structure not being protected to the elevation of the base flood.

1. Provide evidence that the structure is to be located on a lot contiguous to and surrounded by lots with existing structures constructed below the base flood level.
   Not Applicable

2. Provide evidence that the applicant has acknowledged that (a) such construction below the base flood level will increase the risk to life and property and that the applicant proceeds with knowledge of these risks; and (b) any variation is contingent upon the applicant obtaining approval from other agencies having jurisdiction when the variance violates the requirements of such agencies.
   Not Applicable

B. Items applicable only to variations requested from the requirements in Chapter 6 of the Zoning Code (relating to Flood Hazard Land Use Regulations) that, if granted, would significantly impede or increase the flow and passage of floodwaters.

1. Provide evidence that the use will not result in an increased flood height greater than 0.1 feet within the designated regulatory floodway.
   Not Applicable

2. Provide evidence that the resulting increase in the base flood elevations will not affect any existing structures or utilities.
   Not Applicable

3. Provide evidence that the owners of the properties affected by the increased base flood elevation are compensated for the resulting effect on property values, and they give their written agreement to granting the variation.
   Not Applicable

4. Provide evidence that the resulting increased flood elevations will not affect any flood protection structures.
   Not Applicable

## VII. CERTIFICATIONS, CONSENT AND SIGNATURE(S)

I (We) certify that all of the statements and documents submitted as part of this application are true and complete to the best of my (our) knowledge and belief.

I (We) consent to the entry in or upon the premises described in the application by any authorized official of the Village of Glen Ellyn.

I (We) certify that I (we) have carefully reviewed the Glen Ellyn Zoning Variation Request Package and applicable provisions of the Glen Ellyn Zoning Code.

I (We) consent to accept and pay the cost to publish a notice of Public Hearing as submitted on an invoice from the publishing newspaper. I (we) understand that our request will not be scheduled for a Village Board agenda until and unless this invoice is paid.

Bob Verisario/ Chris McClain

Bob Verisario / Chris McClain

Signature of Applicant(s)

7/26/2011 (Revised, 8/9/2011)

Date filed

MATERIALS INCLUDED:

| | ITEM | CODE REFERENCE | |
|---|---|---|---|
| 1. | Properly completed application | 10-10-10(A)1<br>10-10-12(A)5 | _____<br>_____ |
| 2. | Fee Paid | Ord. No. 1904-Z | _____ |
| 3. | Escrow (for Plan Commission cases) | VC – 4-1-4 (H) | _____ |
| 4. | Proof of ownership | 10-10-10(B) | _____ |
| 5. | Current Plat of Survey +<br>floodplain determination (in writing) | 10-10-12(E)<br>10-6-3 | _____<br>_____ |
| 6. | Legal description of property<br>(may be included in No. 4) | 10-10-12(A)2 | _____ |
| 7. | A description of the proposed use and/or Variation, on a dimensioned site plan or plat, with the outline of the building(s). The site plan or plat need not be prepared by an architect or engineer. (Elevations [drawings or exterior walls] are requested). | 10-10-12(A)4 | _____ |
| 8. | Petition signed by neighbors (all within 250 feet) | Optional | _____ |
| 9. | Reimbursement of Fees Agreement (for Plan Commission cases) | VC – 4-1-4 (H) | _____ |

## AFFIDAVIT OF AUTHORIZATION

I, Glenbard Township HS District 87 owner of the property described as

see attached Exhibit B

verify that Chris McClain

is duly authorized to apply and represent my interests before the Glen Ellyn Architectural Review Commission, Plan Commission, Zoning Board of Appeals and/or Village Board. Owner acknowledges that any notice given applicant is actual notice to owner.

Chris McClain

OWNER

J. L. Ahrens

NOTARY

"OFFICIAL SEAL"
JO L. AHRENS
NOTARY PUBLIC, STATE OF ILLINOIS
MY COMMISSION EXPIRES 2/29/2012

# REIMBURSEMENT OF FEES AGREEMENT

Village of Glen Ellyn Acct: #_____
Initial Deposit Amount: _____

I. DESCRIPTION OF PROJECT: Memorial Field Improvements

II. OWNER:

A. Owner of Property: Glenbard Township High School District 87
B. Owner's Address: 596 Crescent Blvd., Glen Ellyn, Illinois 60137
C. Owner's Home Phone Number: 630-469-9100 Fax: 630-469-9107
D. Owner's Work Phone Number: _____
E. Owner's E-mail: glenbard.org
F. If Owner is a Land Trust or Corporation, the attached disclosures of interest should be filled out.

III. PERSON MAKING REQUEST (Petitioner):

A. Name of Petitioner: Bob Verisario/ Chris McClain
B. Petitioner's Address: 596 Crescent Blvd., Glen Ellyn, Illinois 60137
C. Petitioner's Home Phone Number: 630-469-9100
D. Petitioner's Work Number: 630-469-9100
E. Petitioner's E-mail: bob_verisario@glenbard.org/ chris_mcclain@glenbard.org

IV. LOCATION OF PROPERTY:

A. General Location of Property: 671 Crescent Blvd., (SW of Crescent and Park Row)
B. Acreage of Parcel: Approx. 8 acres
C. Permanent Index Number(s): 05-11-410-014
D. Legal Description (Please attach) See Exhibit B

V. REIMBURSEMENT OF FEES:

The Ordinances of the Village require the owners of property, or individuals seeking to utilize property, to receive approval by ordinance or the issuance of a permit to undertake various uses or improvements of property in the Village. These uses can include requests for textual or map changes in the Zoning Ordinance, applications for building permits, requests for zoning relief and other similar requests. The Village has established a fee schedule for the anticipated use of staff time in processing such petitions or applications. In many cases, however the Village cannot reasonably evaluate the validity or compliance of the petition or application with the Ordinances of the Village without the use of reports from various consultants. In some cases, the application or petition requires among other things, public hearings and associated public notice costs, preparation of minutes or transcripts from the public hearing or meeting, recording costs of Ordinances and the preparation of reports by consultants whose services require the payment of out-of-pocket expenses by the Village. These expenses would not have been incurred but for the petition or application. The Village does not intend to seek to make a profit on its utilization of such consultants, but requires that the applicant, or the person receiving benefit, shall be obligated to reimburse the out-of-pocket expenses incurred by the Village. The Village shall seek to employ consultants who shall charge rates consistent with those paid by private parties who seek similar consulting services. The Village intends, through this Agreement, to cause the payment of out-of-pocket expenses and to require the creation of an escrow fund to guarantee that the petition or

application will not result in the citizens of the Village being required to pay for costs incurred at the request of the owner or applicant.

This document shall constitute a contract when an application is made for a license, permit, request for zoning relief or other approval involving the use of real property. Should the Village, in its sole and exclusive discretion, determine that it is necessary or desirable for the Village to obtain professional services, including, but not limited to, attorneys, engineers, planners, architects, surveyors, court reporters, traffic, drainage or other consultants, including full and/or part time site inspection services during the actual construction of any required improvements, and/or to incur costs related to any required notices or recordations, in connection with any application or petition filed by the petitioner then the petitioner and owner shall be jointly and severally liable for the payment of such professional fees and costs, as shall actually be incurred by the Village. The Planning and Development Director is hereby authorized to assign the above described services to the Village staff or to consultants, as the Director deems appropriate and without prior notification to the petitioner.

Any application or petition to be reviewed by the Planning and Development Department or by the Plan Commission or Architectural Review Commission shall require the petitioner to establish an escrow account with the Village in an amount determined by the Planning and Development Director to reimburse the Village for all out of pocket costs associated with the request. These out of pocket costs will cover such things as services provided by the Village's consulting engineer, consulting attorney, consulting planner, traffic consultant, wetland consultant, landscape consultant, architectural consultant, appraiser and transcriber, among others, as well as reproduction costs, public hearing notice costs, recording costs, etc. Along with the application the petitioner shall also submit a signed copy of this agreement thereby acknowledging and agreeing to reimburse the Village for all out of pocket costs associated with the application or petition.

This agreement shall be accompanied by an initial deposit in an amount to be determined by the Director of Planning and Development but shall be no less than $500. The Village will provide an itemized list of Village expenses incurred related to any charge to the escrow account, and the petitioner shall deposit funds to reimburse the Village for those expenses upon notice from the Village that the deposit has dropped below $500. If the expenses are not reimbursed, then reviews meetings and permits associated with out of pocket costs will cease, and the request will not be moved forward through the review process. At the completion of the review process, and development of the project, if appropriate, any remaining balance from the deposit will be returned to the petitioner, without interest, after all expenses have been paid.

The Village shall deduct the incurred expenditures and costs from the funds deposited. If the remaining deposit balance falls below $500.00, the petitioner, upon notice by the Village, shall be required to replenish the deposit to its initial amount. The Village shall mail the petitioner regular invoices for the fees and costs incurred. The petitioner shall replenish the deposit amount within thirty (30) days of issuance of each such invoice directing replenishment of the deposit.

A petitioner who withdraws his or her petition may apply in writing to the Planning and Development Director for a refund of his or her remaining escrow balance. The Planning and Development Director may, at his or her discretion, approve such refund less any actual fees and costs, which the Village has already paid or incurred relative to the application.

Upon the failure of the petitioner or owner to reimburse the Village in accordance with this Agreement, no further action shall be undertaken on the application by the Village President and Board of Trustees, or by any other official or quasi-official individual or body thereunder, including the conduct of any hearings or deliberations, reviews of any plans or applications, the granting of any relief or approvals, issuance of any permits or occupancies, performance of inspections and the execution or recording of any documents, until all such outstanding fees are paid in full and/or the initial deposit is restored to its full amount. Upon any failure to reimburse the Village in accordance with this Section, the Village may in its discretion, apply any or all of the initial deposit to the outstanding balance due.

The remedies available to the Village as set forth hereinabove are non-exclusive and nothing herein shall be deemed to limit or waive the Village's right to seek relief of such fees against any or all responsible parties in a court of competent jurisdiction.

Any remaining balance of any funds deposited pursuant to this Agreement shall be refunded at such time as the completion of Village deliberation on the petition or application, recordation of all necessary documents associated with the petition or application, issuance of a building permit, approval of a final inspection, or issuance of a final certificate of occupancy upon the real property in question whichever occurs later.

BY SIGNING BELOW, THE PETITIONER AND OWNER ACKNOWLEDGE THAT EACH OF THEM HAS READ THE FOREGOING PARAGRAPHS AND EACH OF THEM FULLY UNDERSTANDS AND AGREES TO COMPLY WITH THE TERMS SET FORTH HEREIN. FURTHER, BY SIGNING BELOW, EACH SIGNATORY WARRANTS THAT HE/SHE/IT POSSESSES FULL AUTHORITY TO SO SIGN.

THE PETITIONER AND OWNER AGREE THAT PETITIONER AND OWNER SHALL BE JOINTLY AND SEVERALLY LIABLE FOR PAYMENT OF FEES REFERRED TO IN APPLICABLE SECTIONS OF THE ORDINANCES OF THE VILLAGE OF GLEN ELLYN, AND THE OBLIGATIONS FOR PAYMENT RELATING TO THE FILING OF PETITION OR APPLICATION, AS SET FORTH HEREIN.

Bob Vellucci / Chris McClain
Petitioner

Glenbard Township HS District 87
Owner

Date: 7/26/2011

Village of Glen Ellyn

By:_____
Planning and Development Director

Date: _____

X:\Plandev\PLANNING\FORMS\ReimOfFeesAgrmt 020410 lg.doc

**Memorial Stadium**

**Synthetic Turf Usage Calendar - [SCHOOL YEAR - Tentative Usage Calendar (5 PM - 9 PM)]**

**Updated: May 17, 2011**

| Month | Week | 1/2 Hour Prior to Dusk - 9 PM | Hrs per Day | Potential Hours of Use - Lights: Mon | Tues | Wed | Thurs | Friday | Saturday | Sunday | Total Week - Light Opportunity | ATHLETIC USAGE - Block 1 Time is 5 PM - 7 PM; Block 2 Time is 7 PM - 9PM [Football = FB; Soccer = SC; Field Hockey - FH; Softball = SF; Lacrosse = LC] - ALL times are practice times unless specifically identified as games: Monday | Tuesday | Wednesday | Thursday | Friday | NOTES |
|---|---|---|---|---|---|---|---|---|---|---|---|---|---|---|---|---|---|
| August | 1 | | | | | | | | | NO LIGHT USAGE | | | | | | | |
| | 2 | | | | | | | | | | | | | | | | |
| | 3 | | | | | | | | | | | | | | | | |
| | 4 | 7 pm - 9 pm | 2.00 | 2.00 | 2.00 | 2.00 | 2.00 | 2.00 | 2.00 | | 12.00 | FH/ SC | SC/ FB | SC/ FH | FB/ FH | SC | |
| September | 1 | 7 pm - 9 pm | 2.00 | 2.00 | 2.00 | 2.00 | 2.00 | 2.00 | 2.00 | | 12.00 | SC/ FH | FH game/ FH game | FH game/ FH game | FH/ SC | FH game/ FH | |
| | 2 | 6:30 pm - 9 pm | 2.50 | 2.50 | 2.50 | 2.50 | 2.50 | 2.50 | 2.50 | | 15.00 | JV FB game | FH/ SC | FH/ FH game | FH/ SC | FH/ FH game | |
| | 3 | 6:30 pm - 9 pm | 2.50 | 2.50 | 2.50 | 2.50 | 2.50 | 2.50 | 2.50 | | 15.00 | SC/ SC game | SC/ SC game | FB/ FH | FH game/ FH game | SC | |
| | 4 | 6:30 pm - 9 pm | 2.50 | 2.50 | 2.50 | 2.50 | 2.50 | 2.50 | 2.50 | | 15.00 | JV FB game | FH/ SC | SC game/ SC game | FH game/ SC game | FH | |
| | 5 | 6 pm - 9 pm | 3.00 | 3.00 | 3.00 | 3.00 | 3.00 | 3.00 | 3.00 | | 18.00 | FB/ FH | FH game/ FH game | FH game/ FH game | SC/ FH game | SC/ FH game | |
| October | 1 | 6 pm - 9 pm | 3.00 | 3.00 | 3.00 | 3.00 | 3.00 | 3.00 | 3.00 | | 18.00 | JV FB game | SC game/ SC game | FH/ FH game | FH/FH game | SC | |
| | 2 | 5:45 pm - 9 pm | 3.25 | 3.25 | 3.25 | 3.25 | 3.25 | 3.25 | 3.25 | | 19.50 | SC game/ FH game | FB/ FH | SC game/ SC game | FH/ SC | SC | |
| | 3 | 5:30 pm - 9 pm | 3.50 | 3.50 | 3.50 | 3.50 | 3.50 | 3.50 | 3.50 | | 21.00 | FB/FH/SC | FB/FH/SC | FB/FH/SC | FB/FH/SC | FB/FH/SC | Playoff dependent |
| | 4 | 5:15 pm - 9 pm | 3.75 | 3.75 | 3.75 | 3.75 | 3.75 | 3.75 | 3.75 | | 22.50 | FB/FH/SC | FB/FH/SC | FB/FH/SC | FB/FH/SC | FB/FH/SC | Playoff dependent |
| November | 1 | 5:15 pm - 9 pm | 3.75 | 3.75 | 3.75 | 3.75 | 3.75 | 3.75 | 3.75 | | 22.50 | FB | FB | FB | FB | FB | Playoff dependent |
| | 2 | 4:45 pm - 9 pm | 4.25 | 4.25 | 4.25 | 4.25 | 4.25 | 4.25 | 4.25 | | 25.50 | FB | FB | FB | FB | FB | Playoff dependent |
| | 3 | 4:15 pm - 9 pm | 4.75 | 4.75 | 4.75 | 4.75 | 4.75 | 4.75 | 4.75 | | 28.50 | FB | FB | FB | FB | FB | Playoff dependent |
| March | 1 | 5 pm - 9 pm | 4.00 | 4.00 | 4.00 | 4.00 | 4.00 | 4.00 | 4.00 | | 24.00 | LC/ SC | LC/ SC | SC/ LC | LC/ SC | LC/ SC | |
| | 2 | 5:15 pm - 9 pm | 3.75 | 3.75 | 3.75 | 3.75 | 3.75 | 3.75 | 3.75 | | 22.50 | SF/ LC | LC/ SC | SC/ SF | SC/ LC | LC | |
| | 3 | 5:30 pm - 9 pm | 3.50 | 3.50 | 3.50 | 3.50 | 3.50 | 3.50 | 3.50 | | 21.00 | SF/ LC | LC/ SC | SC/ SF | SC/ LC | LC | |
| | 4 | 6:30 pm - 9 pm | 2.50 | 2.50 | 2.50 | 2.50 | 2.50 | 2.50 | 2.50 | | 15.00 | LC/ SC game | SC/ LC game | SF/ LC game | SC game/ SF game | LC/ SC | |
| | 5 | 6:45 pm - 9 pm | 2.25 | 2.25 | 2.25 | 2.25 | 2.25 | 2.25 | 2.25 | | 13.50 | Spring Break | | | | | |
| April | 1 | 6:45 pm - 9 pm | 2.25 | 2.25 | 2.25 | 2.25 | 2.25 | 2.25 | 2.25 | | 13.50 | SC/ SF game | LC/ SC | LC game/ SC game | LC/ SF game | LC game | |
| | 2 | 6:45 pm - 9 pm | 2.25 | 2.25 | 2.25 | 2.25 | 2.25 | 2.25 | 2.25 | | 13.50 | LC/ LC game | SF/ SC game | SC game/ LC game | SF/ SF game | LC/ SC | |
| | 3 | 7 pm - 9 pm | 2.00 | 2.00 | 2.00 | 2.00 | 2.00 | 2.00 | 2.00 | | 12.00 | SF game/ LC game | SC game/ SC game | SF/ LC game | LC/ SF game | GOOD FRIDAY | |
| | 4 | 7 pm - 9 pm | 2.00 | 2.00 | 2.00 | 2.00 | 2.00 | 2.00 | 2.00 | | 12.00 | SC/ SF game | LC/ SF game | SC/ LC game | SC/ LC | LC game/ SF game | |
| May | 1 | 7:15 pm - 9 pm | 1.75 | 1.75 | 1.75 | 1.75 | 1.75 | 1.75 | 1.75 | | 10.50 | SC game/ SC game | LC/ SC | SC/ SF game | SC game/ SC game | LC/ SF game | |
| | 2 | 7:15 pm - 9 pm | 1.75 | 1.75 | 1.75 | 1.75 | 1.75 | 1.75 | 1.75 | | 10.50 | LC game/ LC game | LC game/ LC game | LC game/ SF game | LC/ SC | LC/ SF game | |
| | 3 | 7:45 pm - 9 pm | 1.25 | 1.25 | 1.25 | 1.25 | 1.25 | 1.25 | 1.25 | | 7.50 | LC/ SC | SF/ LC game | LC/ SF game | SC/ LC game | LC/ SC | |
| | 4 | 7:45 pm - 9 pm | 1.25 | 1.25 | 1.25 | 1.25 | 1.25 | 1.25 | 1.25 | | 7.50 | LC/ SC/ SF | LC/ SC/ SF | LC/ SC/ SF | LC/ SC/ SF | LC/ SC/ SF | Playoff Dependent |
| June | 1 | 7:45 pm - 9 pm | 1.25 | 1.25 | 1.25 | 1.25 | 1.25 | 1.25 | 1.25 | | 7.50 | LC/ SF | LC/ SF | LC/ SF | LC/ SF | LC/ SF | Playoff Dependent |
| | 2 | 7:45 pm - 9 pm | | | | | | | | | | Summer Camps | Summer Camps | Summer Camps | Summer Camps | Summer Camps | |
| | 3 | 8 pm - 9 pm | | | | | | | | | | Summer Camps | Summer Camps | Summer Camps | Summer Camps | Summer Camps | |
| | 4 | 8 pm - 9 pm | | | | | | | | | | Summer Camps | Summer Camps | Summer Camps | Summer Camps | Summer Camps | |
| | 5 | 8 pm - 9 pm | | | | | | | | | | Summer Camps | Summer Camps | Summer Camps | Summer Camps | Summer Camps | Thru July 28th |
| Total - School Year | | | | 72.50 | 72.50 | 72.50 | 72.50 | 72.50 | 72.50 | 0.00 | 435.00 | | | | | | |
| School Year: Monday - Friday (D87 Only) | | | | | | | | 362.50 | | | | | | | | | |
| School Year: Monday - Saturday | | | | | | | | | 435.00 | | | | | | | | |

Exhibit A

5/19/2011

## Memorial Stadium

## Synthetic Turf Usage Calendar - Lighting [SUMMER]

**Updated: May 17, 2011**

| | | | | Potential Hours of Use - Lights | | | | | | | |
|---|---|---|---|---|---|---|---|---|---|---|---|
| Month | Week | 1/2 Hour Prior to Dusk - 9 PM | Light Hrs per Day | Mon | Tues | Wed | Thurs | Friday | Saturday | Sunday | Total Week - Light Opportunity |
| June | 1 | 7:45 pm - 9 pm | | | | | | | | NO LIGHT USAGE | |
| | 2 | 7:45 pm - 9 pm | 1.25 | 1.25 | 1.25 | 1.25 | 1.25 | 1.25 | 1.25 | | 7.50 |
| | 3 | 8 pm - 9 pm | 1.00 | 1.00 | 1.00 | 1.00 | 1.00 | 1.00 | 1.00 | | 6.00 |
| | 4 | 8 pm - 9 pm | 1.00 | 1.00 | 1.00 | 1.00 | 1.00 | 1.00 | 1.00 | | 6.00 |
| | 5 | 8 pm - 9 pm | 1.00 | 1.00 | 1.00 | 1.00 | 1.00 | 1.00 | 1.00 | | 6.00 |
| July | 1 | 8 pm - 9 pm | 1.00 | 1.00 | 1.00 | 1.00 | 1.00 | 1.00 | 1.00 | | 6.00 |
| | 2 | 8 pm - 9 pm | 1.00 | 1.00 | 1.00 | 1.00 | 1.00 | 1.00 | 1.00 | | 6.00 |
| | 3 | 7:30 pm - 9 pm | 1.50 | 1.50 | 1.50 | 1.50 | 1.50 | 1.50 | 1.50 | | 9.00 |
| | 4 | 7:30 pm - 9 pm | 1.50 | 1.50 | 1.50 | 1.50 | 1.50 | 1.50 | 1.50 | | 9.00 |
| August | 1 | 7:30 pm - 9 pm | 1.50 | 1.50 | 1.50 | 1.50 | 1.50 | 1.50 | 1.50 | | 9.00 |
| | 2 | 7 pm - 9 pm | 2.00 | 2.00 | 2.00 | 2.00 | 2.00 | 2.00 | 2.00 | | 12.00 |
| | 3 | 7 pm - 9 pm | 2.00 | 2.00 | 2.00 | 2.00 | 2.00 | 2.00 | 2.00 | | 12.00 |
| | 4 | 7 pm - 9 pm | | | | | | | | | |
| Total Summer | | | | 14.75 | 14.75 | 14.75 | 14.75 | 14.75 | 14.75 | 0.00 | **88.50** |

| | |
|---|---|
| Monday - Friday | **73.75** |
| Monday - Saturday | **88.50** |

Exhibit A

## Memorial Stadium

## Synthetic Turf Usage Calendar

**Updated: March 9, 2010**

| Month | Day of Week | Park District Usage Time Frame | Hours of Use - Park District: Weekend 1 | Weekend 2 | Weekend 3 | Weekend 4** | Weekend 5** | Total |
|---|---|---|---|---|---|---|---|---|
| September | Saturday | 3 p.m. - 5 p.m. | 2 | 2 | 2 | 2 | 2 | 10 |
| | Sunday | 8 a.m. - 6 p.m. | 10 | 10 | 10 | 10 | 10 | 50 |
| October | Saturday | 3 p.m. - 5 p.m. | 2 | 2 | 2 | 2 | 2 | 10 |
| | Sunday | 8 a.m. - 5 p.m. | 9 | 9 | 9 | 9 | 9 | 45 |
| November | Saturday | Not Available - Darkness | | | | | | 0 |
| | Sunday | 8 a.m. - 4 p.m. | When Calendar Dictates | | | | | 0 |
| March | Saturday | 3 p.m. - 5 p.m. | | | | 2 | 2 | 4 |
| | Sunday | 9 a.m. - 5 p.m. | | | | 8 | 8 | 16 |
| April | Saturday | 3 p.m. - 6 p.m. | 3 | 3 | 3 | 3 | | 12 |
| | Sunday | 9 a.m. - 6 p.m. | 9 | 9 | 9 | 9 | | 36 |
| May | Saturday | 3 p.m. - 7 p.m. | 4 | 4 | 4 | 4 | When Calendar Dictates | 16 |
| | Sunday | 9 a.m. - 7 p.m. | 10 | 10 | 10 | 10 | | 40 |
| June | M - F* | Summer Camps | | | | | | |
| July | M - F* | Summer Camps | | | | | | |
| TOTAL Park District - Hours of Use | | | 49 | 49 | 49 | 59 | 33 | 239 |

**Hourly Cost - Calculation**

| | | |
|---|---|---|
| Annual Cost | $ | 20,000 |
| Annual Hours of Use | | 239 |
| Cost per Hour | $ | 83.68 |

* Glen Ellyn Park District will have rights to utilize Memorial Stadium Mondy - Friday for Glenbard Summer Camps, only

** Both District 87 & the Glen Ellyn Park District understand that weekend dates within a particular month will change based on that year's calendar; The intent of this schedule is to provide the G.E. Park District Use as Follows:

**Fall - 1st 10 weekends in the Fall, commencing with the 1st weekend in September, then for the next consecutive 9 weekend dates**

**Spring - The Last 2 weekends in March, then the next consecutive 8 weekend dates**

Exhibit A

Exhibit B



GLENBARD WEST HIGH SCHOOL – MEMORIAL FIELD
GLEN ELLYN, ILLINOIS
Legat Architects Project No. 210090.00
May 20, 2011

**LEGAL DESCRIPTION:**

PARCEL ONE:
LOT 17 IN COUNTY CLERK'S THIRD ASSESSMENT DIVISION IN SECTION 11, TOWNSHIP 39 NORTH, RANGE 10 EAST OF THE THIRD PRINCIPAL MERIDIAN, ACCORDING TO THE PLAT THEREOF RECORDED JULY 3, 1906 AS DOCUMENT NUMBER 88053, IN DuPAGE COUNTY, ILLINOIS.

PARCEL TWO:
ALL OF BLOCK 6 IN WOODTHORP, BEING A SUBDIVISION IN THE SOUTHEAST QUARTER OF SECTION 11, TOWNSHIP 39 NORTH, RANGE 10 EAST OF THE THIRD PRINCIPAL MERIDIAN, ACCORDING TO THE PLAT THEREOF RECORDED JUNE 2, 1926 AS DOCUMENT NUMBER 214660, IN DuPAGE COUNTY, ILLINOIS.

PIN: 05-11-410-014

LEGATARCHITECTS
sustainability performance design

**Memorial Field Quantitative Summary – Exhibit C**
Legat Architects Project No. 210090.00
May 20, 2011(Revision 1, July 25, 2011) (Revision 2, August 9, 2011)

**QUANTITATIVE SUMMARY:**

1. A variation from Section 10-5-5(B)4(3) of the Zoning Code to allow an ornamental gate with a height of 14 feet in lieu of the maximum height of 10 feet permitted.

2. A variation from Section 10-5-5(B)4(11) to allow a fence along Crescent Boulevard with a height of 6 feet 6 inches in lieu of the maximum height of 4 feet permitted.

3. A variation from Section 10-5-5(B)4(32) of the Zoning Code to allow a batting cage with a setback of 1 foot from the southern property line in lieu of the minimum setback of 58.14 feet required.

4. A variation from Section 10-5-5(C)1 of the Zoning Code to allow an impervious surface setback of as little as 7.5 feet for a proposed sidewalk along the southern property line and 0 feet to accommodate the base for the bleachers proposed along the northern property line in lieu of the minimum impervious surface setback of 29.07 feet required.

   A. 3rd Base Line Sidewalk/ Ramp (1,000 SF) located within the required setback along C&NW RR.
      1). Required Setback=29.07'
      2). Proposed Setback=7.5'
   B. North Side Bleachers (2,800 SF) located within the required setback along Crescent Boulevard
      1). Required Setback=29.07'
      2). Proposed Setback=0.0'

5. A variation from Section 10-5-4(A)2(a) to allow a total of 4,268 square feet of accessory structures on the property in lieu of the maximum of 1,000 square feet of accessory structures permitted. *(amendment to previous variation approved by Ordinance 5888 which permitted 1,068 square feet of accessory structures on the property and being requested to accommodate proposed bleachers)*

6. Variations from Sections 10-5-4(A)4(a) and 10-5-4(A)4(c) of the Zoning Code to allow the northern bleachers to be located 0 feet from the northern property line in lieu of the minimum 18 foot and 29.07 foot accessory structure setbacks required.

7. A variation from Section 10-5-13(M)2(b)1 of the Zoning Code to allow 70 foot tall light poles to be spaced as close as 210 feet apart in lieu of the minimum separation of 280 feet required; to allow 70 foot tall and 60 foot tall light poles to be spaced as close as 106 feet apart in lieu of the minimum separation of 260 feet required; to allow 60 foot tall light poles to be spaced as close as 78 feet apart in the lieu of the minimum separation of 240 feet required; and to allow 60 foot tall and 70 foot tall light poles to be spaced as close as 23 and 37 feet apart respectfully from the existing 30 foot tall tennis court light poles in lieu of the minimum separation of 180 feet and 200 feet required.

   A. Pole A1 to A2
      1). Minimum Distance = 240 feet (based on 60 foot height)
      2). Proposed Distance = 78 feet

B. Pole A1 to B1
   1). Minimum Distance = 280 feet (based on 70 foot height)
   2). Proposed Distance = 184 feet
C. Pole A2 to B2
   1). Minimum Distance = 280 feet (based on 70 foot height)
   2). Proposed Distance = 106 feet
D. Pole B1 to C1
   1). Minimum Distance = 280 feet (based on 70 foot height)
   2). Proposed Distance = 234 feet
E. Pole B2 to C2
   1). Minimum Distance = 280 feet (based on 70 foot height)
   2). Proposed Distance = 240 feet
F. Pole C1 to C2
   1). Minimum Distance = 280 feet (based on 70 foot height)
   2). Proposed Distance = 210 feet
G. Pole A1 to Existing (E1)
   1). Minimum Distance = 180 feet (based on average of 60 foot height and 30 foot height)
   2). Proposed Distance = 94 feet
H. Pole A2 to Existing (E1)
   1). Minimum Distance = 180 feet (based on average of 60 foot height and 30 foot height)
   2). Proposed Distance = 23 feet
I. Pole A2 to Existing (E2)
   1). Minimum Distance = 180 feet (based on average of 60 foot height and 30 foot height)
   2). Proposed Distance = 132 feet
J. Pole B2 to Existing (E1)
   1). Minimum Distance = 200 feet (based on average of 70 foot height and 30 foot height)
   2). Proposed Distance = 114 feet
K. Pole B2 to Existing (E2)
   1). Minimum Distance = 200 feet (based on average of 70 foot height and 30 foot height)
   2). Proposed Distance = 37 feet
L. Pole B2 to Existing (E3)
   1). Minimum Distance = 200 feet (based on average of 70 foot height and 30 foot height)
   2). Proposed Distance = 158 feet
M. Pole B2 to Existing (E4)
   1). Minimum Distance = 200 feet (based on average of 70 foot height and 30 foot height)
   2). Proposed Distance = 137 feet

8. A variation from Section 10-5-13(M)2(a)2 of the Zoning Code to allow foot-candle levels as high as 8.49 along the southern property line and 7.32 along the northern property line in lieu of the maximum foot-candle level of 3.0 permitted.

**Memorial Field Quantitative Summary: Exhibit C**


9. A variation from Section 10-5-13(M)2(c) to allow the height of the proposed light poles to exceed the height of the principal building on the site.

   A. Poles A1 and A2:
      1). Maximum Height = 30 feet
      2). Proposed Height = 60 feet
   B. Poles B1, B2, C1 and C2
      1) Maximum Height = 30 feet
      2) Proposed Height = 70 feet

10. Any other zoning relief necessary to construct the project as depicted on the plans presented and available for public review or necessary to accommodate changes requested by the Plan Commission or Village Board.

LEGATARCHITECTS
sustainability performance design

**Memorial Field Evidence: Exhibit D**
Legat Architects Project No. 210090.00
May 20, 2011 (Revision 1, July 25, 2011) (Revision 2, August 9, 2011)

**VILLAGE OF GLEN ELLYN – APPLICATION FOR VARIATION**

## V. EVIDENCE RELATED TO ZONING CODE STANDARDS FOR A VARIATION

### A. Standards Applicable to All Variations Requested:

1. Provide evidence that due to the characteristics of the property in question, there are practical difficulties or particular hardship for the applicant/owner in carrying out the strict letter of the Zoning Code:

**Evidence related to a required 29.07' setback associated with impervious surface areas (3rd base line sidewalk/ ramp and north side bleachers); and accessory structure (north side bleachers)**

- **The Village previously approved a variance for the 3rd base line dugout and 3rd base line bleacher pad outside of a required 30.5' impervious area setback and 30.5' accessory structure setback to allow for safe play distances and an irregular site. The proposed 3rd base line sidewalk and ramp will allow for additional handicap access to the 3rd base bleacher pad from the newly constructed observation area on the west end of the field. This enhancement was not included in the previous variance due to budget limitations. Also, the required setback distance has been revised to 29.07' per comments received from Village Staff on 1/12/2011.**
- **The proposed north side bleachers will replace current temporary bleachers and provide permanent seating with dedicated handicap accessible seating/ viewing areas. These proposed bleachers were previously indicated in the original permit application submitted to the Village as "Future" however, was left out of the previous variance application due to budget limitations. The storm water storage for these bleachers however, was included in the design capacity of the detention basin constructed for the recent field improvements.**
- **A lengthy lot width along Park Row (581.34') results in a relatively large required setback distance (5% of lot width at 581.4'=29.07' required setback) around the perimeter of the entire site (including existing railroad right-of-way).**
- **The primary occupant of the property (Glenbard West High School) is located across the street/ north of Crescent Boulevard. An existing ±3'-4' change in elevation between Crescent Boulevard and the athletic fields does not allow for safe pedestrian access from an existing Crescent Boulevard crosswalk to the field without the installation of stairs. The new bleachers will replace the previously constructed stairs and will continue to provide access to the field.**

**Evidence related to accessory structure combined area (>1,000-SF):**

- **The Village previously approved a requested variance to the accessory structure combined area of 1,068sf to allow the District to construct a 3rd base dugout and expanded 1st base dugout (with storage). Based on the Village Zoning Ordinance, permanent bleachers are considered an accessory structure. The District is requesting an amendment to the previously approved variance to allow for the construction of an approximately 2,800sf bleacher area immediately north of the field within the 29.07' setback (previously 30.5'). These permanent bleachers will replace current temporary bleachers and provide dedicated**

handicap accessible seating/viewing areas and maintain access to the field from the existing crosswalk. In addition, the existing temporary/ portable softball bleachers are being included in this request as at the request of the Village. The District intends to keep these bleachers and existing north side temporary bleachers in place year round due to the cost of removal, storage and potential damage to the bleacher structures. The area of these existing bleacher pads is approximately 400sf which brings the total impervious area to 4,268sf. The existing north side bleachers currently fit within the same footprint as the proposed future bleachers.

Evidence related to the height of the main entry gate and Crescent Boulevard Fencing.

- The Zoning Code indicates that fences are permitted obstructions within required setbacks (Section #10-5-5(B)). 11.b.3 in the Permitted Obstructions and Accessory Structures in Required Setbacks Matrix indicates a maximum height of 10' for ornamental gates.
- As part of the campus master plan and future Crescent Boulevard safety improvements, it is the District's intent to install an ornamental fence along the Crescent Boulevard property line with masonry piers. The new fence will provide a safe separation from Crescent and visually enhance the campus. In addition, a main entry gate is proposed that will align with the current pedestrian crosswalk. The purpose of the entry gate is to define both the desired pedestrian access across Crescent as well as the main field access point. The main entry gate is proposed to be constructed at a height of approximately 14' at the highest point and approximately 6'-6" along the balance of the fence. The faces of the masonry piers are proposed to be located at the property line. The 6 foot fence will allow for a more secure site consistent with the currently installed fence.

Evidence Related to Batting Cage Setback

- The District would like to construct a batting cage for softball use. The proposed location is in place of a seldom used and difficult to supervise basketball court immediately south of the existing tennis courts. The current basketball court encroaches on the railroad property approximately 4.65 feet. The District is in the process reducing the size of the existing courts to eliminate this encroachment under a maintenance project. The reduced size will be approximately 1 foot from the property line on the District's side. Future plans to utilize this area as a batting cage require that a variance be requested due to a proposed change in use. The existing pavement is directly adjacent to a tree lined portion of the railroad property.

Evidence related to the height of poles, foot-candle requirements and location of light poles for Field Lighting:

- The Zoning Code indicates that light poles shall not exceed the maximum height of the principal structure on the site and that the maximum allowable foot-candle level along the property line abutting a non-residential use shall not exceed 3.0 foot-candles. Due to the unique requirements of lighting sports fields, the recommended pole heights vary between 60' at the softball field to 70' at the IHSA regulation multi-purpose field along Crescent Boulevard. The proposed mounting heights (height of poles) and pole location are essential to achieve the recommended illumination levels for safe play based on the Illumination Engineer Society of North America (IENSA) recommendations.

- **The required locations of the poles combined with the necessary light levels result in light levels at the property line abutting non-residential properties in excess of 3.0 foot-candles at 2 locations. The two affected non-residential adjacent properties are the C&NW Railroad and Glenbard Township H.S District 87. Along the south property line adjacent to the railroad, foot-candle levels vary between 0.00 and 8.49 maximum. The highest levels occur directly in line with the softball field for a length of approximately 300 feet, and vary between 1.8 and 8.49 foot-candles. The highest foot-candle level occurs at one point, directly in line with the west edge of the softball backstop. At the east and west corners of the field, the levels drop to below the allowable level of 3 foot-candles. Along Crescent Boulevard, directly adjacent to Glenbard West High School, foot-candle levels vary between 0.00 and 7.32 maximum. The highest levels occur directly in line with the football field for a length of approximately 389 feet and vary between 1.49 and 7.32 foot-candles. The highest foot-candle level occurs at one point, directly in line with the west 40 yard line on the field. At the east and west corners of the field, the levels drop to below the allowable level of 3 foot-candles.**
- **At locations abutting residential properties, a maximum foot candle level of 0.5 at the lot line is required by the Zoning Code. The only residential properties adjacent to the site occur along Park Row, with one parcel directly adjacent to the site in the southeast corner of the property. Along the east property line, foot-candle levels vary between 0.01 and 0.02 and fall well below the Code requirements. The next closest residential properties to the south are separated from the school site by a 100' wide elevated railroad easement, heavy tree line and the Illinois Prairie Path – Main Stem. Based on horizontal foot-candle lighting data furnished from the manufacturer, it is anticipated that no more than 0.1 of a foot candle will extend toward these properties. Directly east and west of the extent of the field these levels drop to 0.0 foot-candles.**
- **The installation of field lighting is essential to the optimal operation of the Glenbard Township H.S. District 87 curricular and co-curricular programs. The installation of lights will allow the District to maximize the financial investment made in the synthetic turf field. Based on the current location of the field and the optimum placement and height of the light poles to achieve the recommended illumination levels for safe play, the light poles need to be spaced less than four times the mounting height. Refer to quantitative summary for specifics related to pole spacing.**

2. Either:

   a. Provide evidence that the property in question cannot yield a reasonable return if permitted to be used under the conditions allowed by the Zoning Code (i.e., without one or more variations):

   **It has always been the goal of the District to maximize the utilization of outdoor instructional space on site to allow greater student and community use while reducing the amount of students bussed off campus that participate in curricular and co-curricular activities. Construction of the synthetic turf field at Memorial Field was an essential step in realizing this goal. While the field use has increased significantly from a playability aspect, the District needs to increase the hours available in the day to accommodate more students. Without the requested zoning variations, the District cannot maximize its financial investment in the synthetic turf field. Specifically in the fall and spring season, onset of darkness impacts the amount of available time for practice or competitions. Glenbard West offers numerous sports**

**programs (and levels) in both the spring and fall season that would utilize this space (See Exhibit A)**

OR

b. Provide evidence that the plight of the applicant/owner is due to unique circumstances relating to the property in question.

**District 87 as an educational institution has an obligation to provide educational opportunities to students. Development of these improvements will help the school district meet this objective.**

3. Provide evidence that the requested variations, if granted, will not alter the essential character of the locality of the property in question.

**The required variations will not alter the essential character of the locality of the property as the proposed site use will remain the same as the existing (athletic fields). Proposed accessory structures totaling ±4,268-sf in size would allow for permanent bleachers with dedicated handicap seating/ viewing areas which are built into the natural slope of the site which will result in a better general appearance of the site. Impervious surfaces including sidewalks and bleachers would allow for safe field accessibility of students, staff and spectators and would not alter the site's character. Proposed ornamental fencing with masonry piers will serve to enhance visibility of the main entry and the overall appearance of the north boundary of the property. Installation of batting cage fencing will replace a seldom used and difficult to supervise basketball court area. There are currently nine 30' high light poles on site at the existing tennis courts which are used by both the School District and neighbors alike. These lights were installed by the Park District at the time the courts were constructed. There are currently no restrictions on the use of these lights and no shielding is present. The proposed new lighting will utilize state of the art light shielding technology and will not negatively impact neighbors and the Crescent Boulevard roadway.**

B. For the purpose of supplementing the above standards, the ZBA or PC, in making its recommendation that there are practical difficulties or particular hardships, shall also take into consideration the extent to which the evidence establishes or fails to establish the following facts favorably to the applicant:

1. Provide evidence that the particular physical surroundings, shape or topographical condition of the property in question would bring particular hardship upon the applicant/owner as distinguished from a mere inconvenience if the strict letter of the Zoning Code were to be carried out:

**The existing synthetic turf field is located 16.7' from Crescent Boulevard right-of-way, 1.7' outside of an existing 15' wide utility easement. Due to the current location of the field, and unique triangular shape of the parcel, the south limits of the softball field are only 18.5' from the south lot line. For these reasons, a variance for the location of temporary bleacher pads and dugouts was approved by the Village.**

**Existing outdoor instructional space is located at an approximate 3'-4' difference in elevation than Crescent Boulevard. It is also located across the street from the Glenbard West High School campus, on the opposite side of Crescent Boulevard. Based on the change in elevation, the location of an existing Crescent Boulevard cross-walk and lack of dedicated handicap accessible seating for the main play field, variances for impervious surface area setbacks and accessory structure**

**setbacks for a proposed permanent bleacher are required. Additional variances are required to allow spectators to access the 3rd base softball bleachers from the west paver patio as access from the east is not possible.**

**Despite the recently completed installation of synthetic turf at Memorial Park, there continues to be a need to program curricular and co-curricular student activities on campus. Due to the unique configuration of the Glenbard West Campus it has extremely limited space to accommodate the need of the school and community. In order to maximize the use of its limited space and reduce the amount of students bussed off-campus, variances related to the installation of athletic field lighting are being requested. Without the requested zoning variations, the District cannot maximize its financial investment for curricular and co-curricular use due the limited time during the day that the field can be utilized, especially in the spring and fall when the majority of students/ athletes are using the fields for team practice and games after regular school hours.**

2. Provide evidence that the conditions upon which the petition for variation is based would not be applicable generally to other property within the same zoning district:

   **The variances mentioned in this application are based on unique circumstances due to the property's use as outdoor instructional space including an irregular shaped parcel resulting in limited site area, the proximity of the site to an existing railroad (Chicago & Northwest Railroad), differences in elevation between the site and public right-of-way and that the main occupants of the site are required to cross a public road in order to access the site.**

3. Provide evidence that the purpose of the variation is not based exclusively upon a desire to make more money out of the property in question.

   **The purpose of the requested variations is not based upon a desire to make money as the owner of the site is a Public School District. The variances are being requested in order to maintain the general nature of the site as outdoor instructional space, to provide improvements in accessibility, to increase the availability of the field for the students after school hours and to decrease student bussing which will improve student safety and reduce costs to the School District.**

4. Provide evidence that the alleged difficulty or particular hardship has not been created by any person presently having an interest in the property in question or by the applicant.

   **Hardships identified above are based on site conditions, lot area, general location and historical site use.**

5. Provide evidence that the granting of the variation will not be detrimental to the public welfare or injurious to other property or improvements in the neighborhood in which the property in question is located.

   **The construction of permanent bleachers, sidewalk, entry gate, batting cage fencing and field lighting will not be detrimental to the public welfare or injurious to other property or improvements. The addition of the items listed above will benefit the users and general public. The proposed permanent seating will provide needed handicap accessible seating/ viewing areas for the main field and will replace temporary bleachers in this location. The proposed entry gate will provide a dedicated and visible field access point for spectators and enhance the overall campus appearance. The proposed 3rd base walkway and ramp will provide an accessible route to the 3rd base softball bleachers. Installation of a batting cage will replace a little used and difficult to supervise basketball**

**court. Lastly, field lighting will increase the availability and usability of the field for the District and community and reduce student bussing off-campus thereby enhancing student safety and reducing costs.**

**Installation of energy efficient light fixtures with improved light control shields will greatly reduce the amount of light outside of the immediate property. The District will not require light usage beyond 9:30 pm and will not require light usage on Sunday evenings. In addition, the location of the proposed lights and foot-candle variance will not have any negative effect on adjacent residential properties as foot-candle levels abutting residential areas are well below the requirements of the Zoning Code. In addition, non-residential uses affected by the ordinance include the Railroad and the School District and the nearest residential property to the south is well over 100' away, separated by the C&NW Railroad, heavy tree line and Illinois Prairie Path – Main Stem. While use will be increased at the site, it will not be used for highly attended events. The space will be mostly used for sport practice and competitions for field hockey, lacrosse, soccer, softball and JV football.**

6. Provide evidence that the proposed variations will not:

   a. Impair an adequate supply of light and air to adjacent property;

      **Proposed site improvements will not impair an adequate supply of light and air to adjacent property. The majority of proposed improvements, with the exception of the light poles and masonry ornamental fence columns are all proposed to be installed at grade. Proposed fencing is not solid and will permit light and air to flow through. Please note that adjacent property to the south is currently occupied by the C&NW Railroad, adjacent property to the east is currently occupied by Park Row and adjacent property to the north is currently occupied by Crescent Boulevard and Glenbard West High School and School District 87 Offices.**

   b. Substantially increase the hazard from fire or other dangers to the property in question or adjacent property;

      **Proposed impervious (concrete and masonry) surfaces will not increase the hazard from fire or other dangers to the property in question as they are non-combustible.**

   c. Otherwise impair the public health, safety, comfort, morals or general welfare of the inhabitants of the Village.

      **As previously stated, the District proposes that lights be on until only 9 pm with a grace period to 9:30 to allow for exiting and events that extend beyond 9pm. The District will not use the lights on Sunday evenings. Events programmed at Memorial Field will be for less attended competitive events and practices. The District has also implemented enhancements along Crescent Boulevard to improve safety. Specifically, School Speed Zone Implemented; Parallel parking along the south side of Crescent Boulevard; Pedestrian walkway parallel to the Memorial Field fence; Signage; Crosswalk Beacon (Installation expected in August/September 2011) and more. The proposed site use will remain the same as the existing site use (outdoor instructional space for curricular and co-curricular events). As such, proposed variances will not impair the public health, safety, comfort, morals or general welfare of the Village. As previously stated, there are existing lights on site with no restrictions of use.**

   d. Diminish or impair property values within the neighborhood;

**There is no factual evidence that we have seen that indicate that property values will be negatively affected due to these improvements. Contemporary programs and contemporary school facilities generally enhance property values in a community. There are numerous surrounding communities where high school stadium complexes with lights are located in residential neighborhoods.**

e. Unduly increase traffic congestion in the public streets and highway;

**An increase in traffic congestion is not expected due to the fact that Memorial Field is used for practices and competitions for less attended events. Events programmed at Memorial Field will not attract significant crowds due to the type of events that will be programmed at this field. Please refer to the Memorial Field usage schedule referenced in Exhibit A. These events will occur after school hours and will not conflict with peak student arrival or dismissal times. District 87 has sufficient parking available for spectators that would attend competitive events in the evening at Memorial Field. There are approximately 26 recently configured parallel parking spaces available on the south side of Crescent Boulevard. In addition, we have 167 parking spaces available for spectators in the Glenbard West staff parking lot, 33 spaces at the District Office, 29 spaces behind Biester Field house, 20 spaces at Duchon Field, 19 Spaces around the building, 10 spaces at the facility office and 29 spaces on the north side of Crescent Boulevard. All included there could be up to as many as 333 spaces which are available for parking after school hours. This number of parking spaces will easily accommodate competitive events at Memorial Field. As we have discussed previously, Memorial Field is not a 'stadium site'. Less attended competitive events will be held at this field such as soccer, lacrosse, softball, field hockey and the most highly attended event would be JV football. The total number of students and spectators already attending practices and games in the evening will be consistent with current attendance during daytime hours. Refer to Exhibit P for Attendance.**

f. Create a nuisance; or

**The proposed variances will not create a nuisance as general site use will remain the same.**

g. Results in an increase in public expenditures

**Lights will be funded 100% by community group donations and/or the Glen Ellyn Park District through an Intergovernmental Agreement. At this particular point in time the GE Park District has not expressed an interest in funding a portion of the lighting cost, therefore 100% of the costs will need to be raised by community groups. District 87 taxpayers will not fund the capital cost of the lights. Ongoing usage of lights is projected to cost less than $5 per hour (energy costs). Other projects referenced will be prioritized and funded via District 87 capital improvement project planning. Requested variances include work located outside of the public right-of-way, on school district property. The school district will be responsible for all maintenance and repair associated with the requested variances.**

7. Provide evidence that the variation is the minimum variation that will make possible the reasonable use of the land, building or structure.

**Requested variations for paved surfaces (including bleachers, sidewalk and ramp) within a required setback will make possible the reasonable use of the site as outdoor instructional space for curricular and co-curricular use. The requested variances will allow for safer access to the fields by students, staff and general public. The requested variation for the installation of lighting will enhance the use of the field so that more students can remain on campus for curricular and co-curricular events due to the increased time outdoor instructional space is available for use after school hours. Requested variations for the installation of a batting cage will eliminate a little used and difficult to supervise basketball court.**

8. Please add any comments which may assist the Zoning Board of Appeals in reviewing this application.

**Glenbard Township High School District #87 recently constructed a synthetic turf surface at Memorial Field located at its Glenbard West campus. The enhancements to the site included: IHSA regulation multi-purpose synthetic field; softball field; detention; dugouts; bleacher pads; fencing; sidewalk & stairway access to the field; brick paver viewing area; parking area improvements. These enhancements have provided a durable, consistent and safe surface for students for curricular and co-curricular (physical education, athletic and other co-curricular uses.) This enhancement has increased the utilization of the field for our students which is extremely important to the school due to the fact that the West campus has very limited outdoor instructional space.**

**Future enhancements to Memorial Field will provide additional benefits to students and the school community.**

**The additional enhancements are as follows:**

- **Lighting –**
  - Lighting at Memorial Field will allow Glenbard West/ District 87 to:
    - Maximize use of the Memorial Field and take full advantage of the financial investment made in the recently installed synthetic field surface.
    - Increase the amount of programming for students on-site. Students stay on campus and do not need to be bused to use other field locations.
    - Realize cost reductions through bus savings.
    - Make the field available to other community groups such as the Glen Ellyn Park District for their programming.

  - Other key elements of the proposal for lights are that:
    - The lighting solution is based on new/ current technology that significantly limits light "spill" and eliminates light directed upward reducing effects on night sky.
    - Proposed pole heights and locations are based on current industry design standards to provide an even distribution of light on the area of play.
    - The solution is energy efficient and green. Cost per hour of operation is anticipated to be less than $5.00 per hour.
    - Lights would be kept on no later than 9:30 p.m. in the evening consistent with other fields that are lit within the Village of Glen Ellyn.

- Light levels at all adjacent residential properties are significantly below the required Zoning Code limits with the exception of the areas specifically outlined in the Variance Request.
- The 9:30 p.m. time limit is also consistent with the practice at other Glenbard High Schools. Moreover, only three of the fourteen West Suburban Conference schools have a time restriction.

- **Seating –**
  - We propose seating on the north side of the field which will provide permanent seating with improved handicap accessibility.

- **Sidewalk Enhancement –**
  - Installation of sidewalk on the southwest portion of the field that provides connection from the donor paver area to the 3rd base stands of the softball field.

- **Masonry Fence –**
  - Installation of a masonry fence will provide a safer and more aesthetically pleasing entry way to the field site.

- **Comparative Data –**
  - Attached is a listing of similar Musco lighting installations with the designated foot-candle levels and corresponding pole heights (Exhibit E). Please note that the proposed average of 32.7 is significantly less than the example projects which are designed to 50 foot-candles. Average foot-candle intensity on the field is based on the number of spectators and the sports being played. Since the comparable installations are all main stadium fields, they typically seat a significant number of spectators (over 2,500) which requires a higher light intensity.
  - The Glen Ellyn Park District currently operates 2 facilities that accommodate soccer and softball (Village Green and Ackerman Park respectively). Both of these facilities operate their lights until 11:00 pm daily, including weekends. Mary Knoll Miniature Golf operates lights until 10:00 pm daily and on Saturdays (June – September) until 11:00pm. George Ball Park, a tennis facility, operates lights until 10:00pm.
  - The City of Elmhurst has recently approved an Ordinance granting a Conditional Use Permit to York High School which allows field lighting to be operated from 5:30am to 9pm Monday thru Thursday ; 5:30 am to 11pm Friday; 7am to 11pm Saturday. Times are in force from March 1 thru June 15 and August 15 thru November 30. No lights are to be used on Sundays. They also incorporated language related to use of the public address system to cover Monday thru Saturday during games only and Sundays – Noon to 6pm during games only.

- **Impact to Residents:**
  - **Lighting:**
    - Spill: D87 lighting studies indicate that there will be no light spill onto adjoining neighbors' properties. There will be minimal light spill on Crescent Boulevard.
    - Day of Week/ Time of Day: Lights will not be allowed on Sundays. D87 is requesting to keep lights on until 9:30 pm when field is in use.

- Field of Play: Field will be lit at an average of 32.7 foot candle (1.68 to 1 uniformity).

- **Noise:** D87 will not install a permanent sound system at the Memorial Field site. D87 will use a portable sound system for national anthem and student introductions, no play by play announcements. Third party users will not be allowed to bring sound systems to the field for their events.
- **Field Use/ Rental:** D87 students will be the primary users of Memorial Field. Other authorized users are D87 community youth athletic groups and the Glen Ellyn Park District per an Intergovernmental Agreement. Other 3rd party users will require written approval from the School Superintendent, as designee of the Board of Education.

- **Other Items –**
  - No new landscaping is being proposed on site and no trees are planned for removal. See Exhibit L for existing landscaping on site. Note: Recently 6 crab apple trees were planted in the Memorial Field area to honor prior history, specifically the 'Soldiers Pathway' which was previously at this site.
  - No parking lot expansion that would require a setback variance from the Zoning Code is being explored by the District at this time. Any future on-site parking will comply with all storm water requirements.

Exhibit E

# Project References*

**Addison Trail High School**
Addison, Illinois
*50 Footcandles*
*70' Mounting Height*

**Dwight Eisenhower High School**
Blue Island, Illinois
*50 Footcandles*
*70' & 90' Mounting Height*

**Evanston High School**
Evanston, Illinois
*50 Footcandles*
*70' & 80' Mounting Height*

**Evergreen Park High School**
Evergreen Park, Illinois
*50 Footcandles*
*70' Mounting Height*

**Glenbard North High School**
Carol Steam, Illinois
*50 Footcandles*
*80' Mounting Height*

**Homewood Flossmoor High School**
Flossmoor, Illinois
*50 Footcandles*
*80' Mounting Height*

**Lemont High School**
Lemont, Illinois
*50 Footcandles*
*70' & 90' Mounting Height*

**Maine South High School**
Park Ridge, Illinois
*50 Footcandles*
*90' Mounting Height*

**Metea Valley High School**
Aurora, Illinois
*50 Footcandles*
*90' & 80' Mounting Height*

**Montini High School**
Lombard, Illinois
*50 Footcandles*
*70' Mounting Height*

**Oak Park River Forest High School**
Oak Park, Illinois
*50 Footcandles*
*80' & 90' Mounting Height*

*Partial listing
© Musco Lighting

Exhibit F

JACOB & HEFNER ASSOCIATES, INC.
ENGINEERS • SURVEYORS

1901 S. MEYERS ROAD • SUITE 180
OAKBROOK TERRACE, IL 60181
PHONE: 630-652-4600 • FAX: 630-652-4601

January 4, 2011

Village of Glen Ellyn
535 Duane Street
Glen Ellyn, Illinois 60137

Re: ***Glenbard West High School (GWHS) - Memorial Field***
***Stormwater Management Report Addendum #2***
***J&HA Project No. E619***
***DPC SWP #10-17-0010***

This *Stormwater Management Report Addendum #2* was prepared to address the construction of additional impervious area at the above-referenced site. The additional impervious area, which consists of 0.10 acre, consists of proposed bleachers, located along the north lot line of the site, and a new paved sidewalk, located on the southwest and south portions of the site. The proposed sidewalk will extend from an existing paved patio, located on the west side of Memorial Field, to an existing 3rd base line bleacher pad located on the south portion of the site.

Jacob & Hefner Associates prepared a *Stormwater Management Report Addendum*, dated 10/18/10, in order to address 0.06 acre of additional impervious area associated with the above-referenced paved patio. The addendum indicated that an existing stormwater detention pond, located on-site, was designed to accommodate 0.09 acre of future impervious area and as such, sufficient detention volume for the paved pathway and patio was provided.

Per our approved *Stormwater Management Report for GWHS*, last revised May 2010, the existing stormwater detention pond was designed to provide additional detention volume above and beyond 0.09 acre of future impervious area as the design volume provided in the pond (0.62 Ac-Ft at HWL=726.00) exceeds the design detention volume required in the pond (0.50 Ac-Ft at HWL=725.45). Jacob & Hefner Associates modeled the existing detention pond in order to demonstrate that sufficient detention volume is available for the increase in impervious area. Pond modeling was performed using TR20 software and pond as-built conditions. The pond as-built conditions were obtained from an *As-Built Conditions Map*, dated 12/29/10, prepared by Midwest Technical Consultants, Inc.

Based on our analysis, the pond has sufficient detention volume for 0.06 acre of additional impervious area, associated with our 10/18/10 addendum, as well as 0.10 acre of additional impervious area associated with this addendum. The revised detention volume required at the site consists of 0.54 Ac-Ft at a HWL elevation of 725.47. Please note that as-built detention volume currently provided in the pond consists of 0.66 Ac-Ft at a HWL elevation of 726.00; as such, an additional 0.12 Ac-Ft of detention volume is currently available in the existing pond for potential future development at the site.

Sincerely,
**JACOB & HEFNER ASSOCIATES, INC.**

Mark Zaprzalka, P.E.
Project Manager

## EQUIPMENT LIST FOR AREAS SHOWN

| Pole | | | | Luminaires | | | | |
|---|---|---|---|---|---|---|---|---|
| QTY | LOCATION | SIZE | GRADE ELEVATION | MOUNTING HEIGHT | LAMP TYPE | QTY / POLE | THIS GRID | OTHER GRIDS |
| 2 | A1-A2 | 60' | - | 60' | 1500W MZ | 3 | 3 | 0 |
| 1 | B1 | 70' | - | 70' | 1500W MZ | 8 | 8 | 0 |
| 1 | B2 | 70' | - | 70' | 1500W MZ | 7 | 7 | 0 |
| 1 | C2 | 70' | - | 70' | 1500W MZ | 7 | 7 | 0 |
| 5 | ← TOTALS → | | | | | 28 | 28 | 0 |

# SOFTBALL

musco GREEN GENERATION LIGHTING

GUARANTEED PERFORMANCE

## ILLUMINATION SUMMARY

**Softball**
Glenbard West High School Softball/Soccer
Glen Ellyn,IL

**Softball**
Size: 200'/200'/200' - basepath 60'
Grid Spacing = 20.0' x 20.0'
- Values given at 3.0' above grade

Luminaire Type: Green Generation
Rated Lamp Life: 5,000 hours
- Avg Lumens/Lamp: 134,000

**CONSTANT ILLUMINATION HORIZONTAL FOOTCANDLES**

| | Infield | Outfield |
|---|---|---|
| No. of Target Points | 25 | 73 |
| Average | 50.4 | 33.8 |
| Maximum: | 66 | 48 |
| Minimum: | 34 | 22 |
| Avg/Min: | 1.47 | 1.51 |
| Max/Min: | 1.93 | 2.17 |
| UG (Adjacent Pts): | 1.41 | 1.27 |
| CV: | 0.17 | 0.18 |

| | |
|---|---|
| Average Lamp Tilt Factor: | 1.000 |
| Number of Luminaires: | 28 |
| Avg KW over 5,000: | 43.79 |
| Max KW: | 47.6 |

**Guaranteed Performance:** The CONSTANT ILLUMINATION described above is guaranteed for the rated life of the lamp.

**Field Measurements:** Averages shall be +/-10% in accordance with IESNA RP-6-01 and CIBSE LG4. Individual measurements may vary from computer predictions

**Electrical System Requirements:** Refer to Amperage Draw Chart and/or the "Musco Control System Summary" for electrical sizing.

**Installation Requirements:** Results assume +/- 3% nominal voltage at line side of the ballast and structures located within 3 feet (1m) of design locations.

# Exhibit G

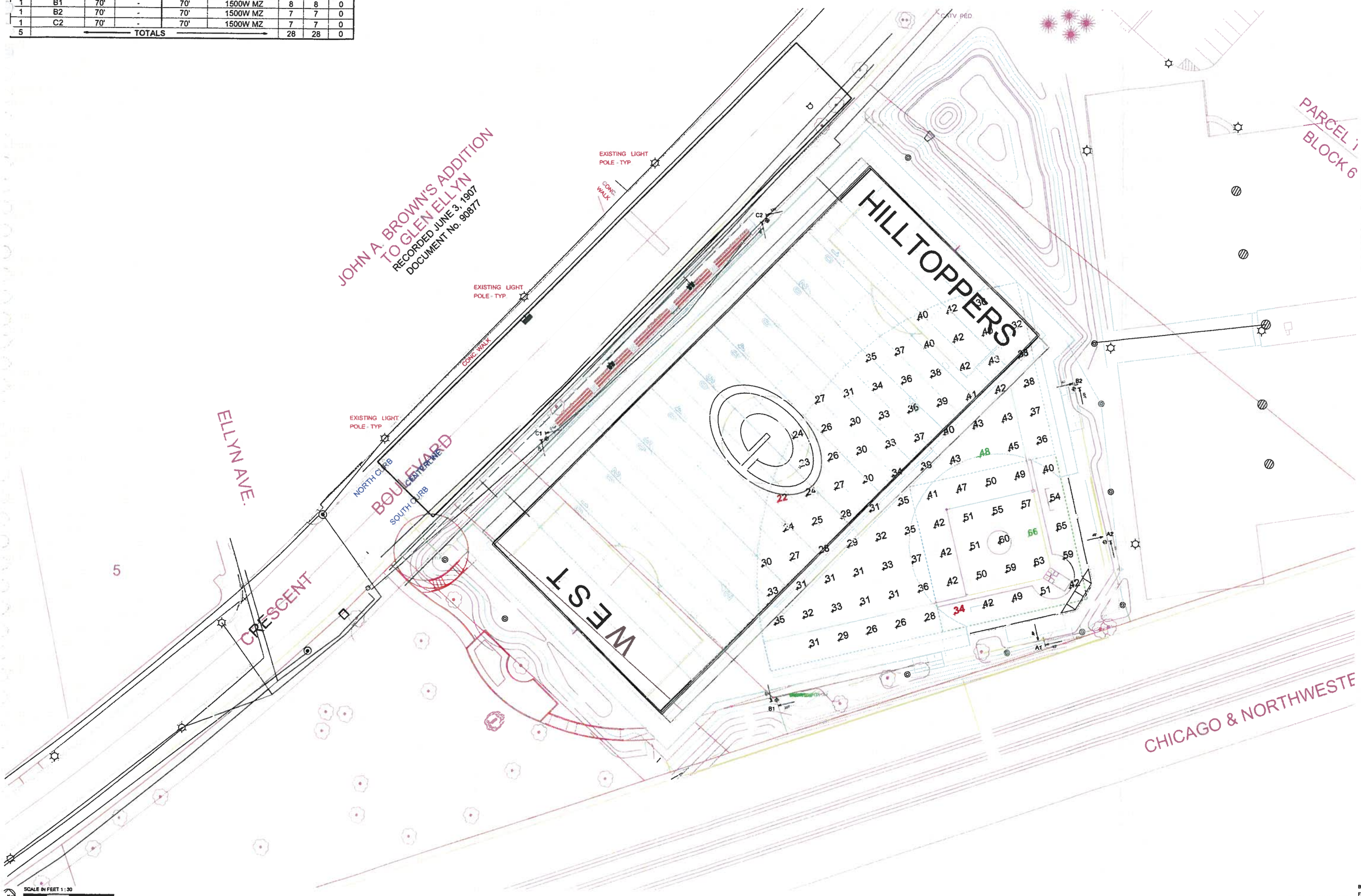


By: Ryan A. Marsh, LC
File #: 122716R10 Date: 18-Jul-11
Not to be reproduced in whole or part without the written consent of Musco Lighting. ©1981, 2011 Musco Lighting

# BLANKET GRID

musco GREEN GENERATION LIGHTING

## EQUIPMENT LIST FOR AREAS SHOWN

| Pole | | | | Luminaires | | | | |
|---|---|---|---|---|---|---|---|---|
| QTY | LOCATION | SIZE | GRADE ELEVATION | MOUNTING HEIGHT | LAMP TYPE | QTY / POLE | THIS GRID | OTHER GRIDS |
| 2 | A1-A2 | 60' | - | 60' | 1500W MZ | 3 | 3 | 0 |
| 1 | B1 | 70' | - | 70' | 1500W MZ | 8 | 8 | 0 |
| 1 | B2 | 70' | - | 70' | 1500W MZ | 7 | 7 | 0 |
| 2 | C1-C2 | 70' | - | 70' | 1500W MZ | 7 | 7 | 0 |
| 6 | ← TOTALS → | | | | | 35 | 35 | 0 |

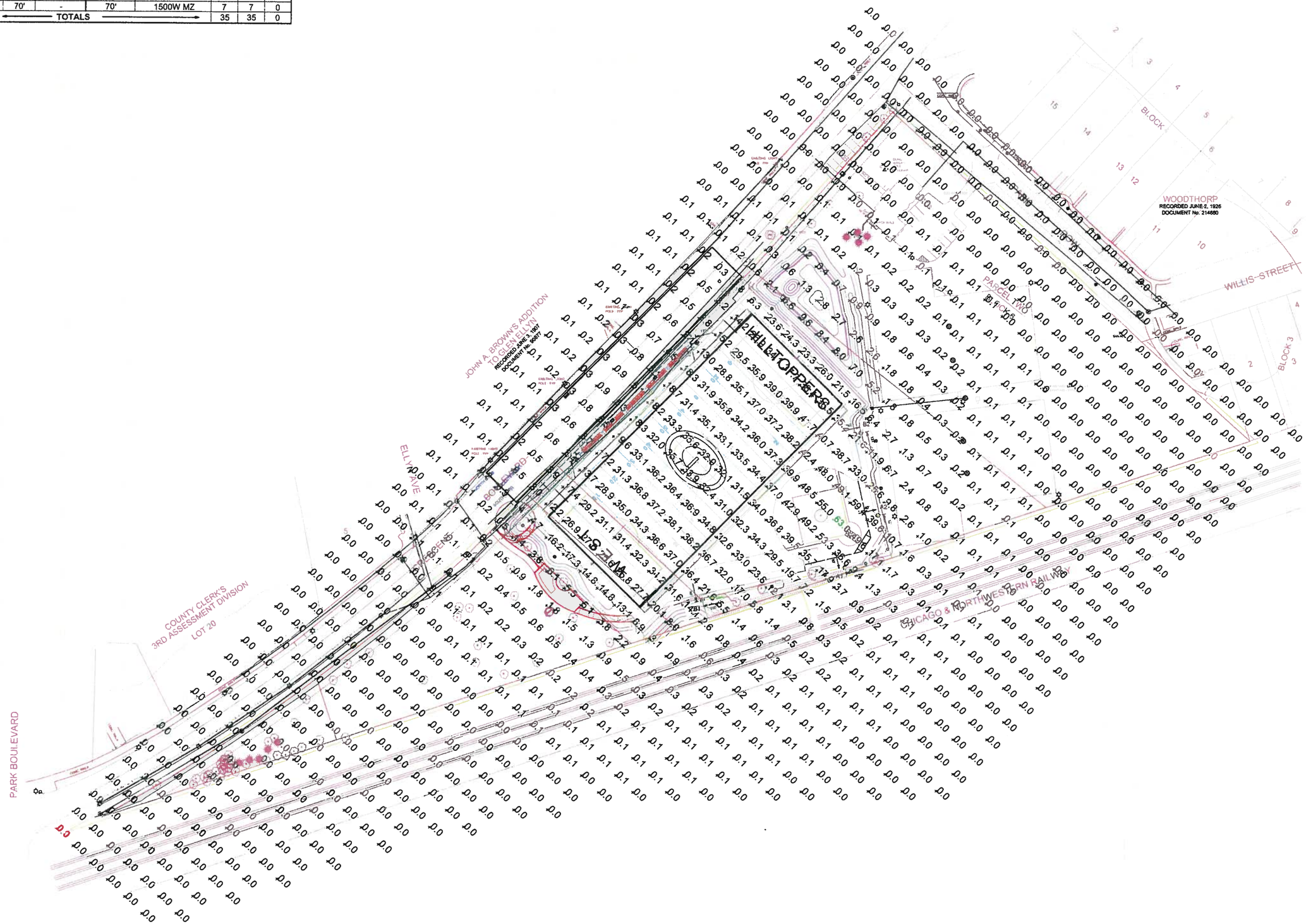


SCALE IN FEET 1 : 60

GUARANTEED PERFORMANCE

## ILLUMINATION SUMMARY

**Softball**
Glenbard West High School Softball/Soccer
Glen Ellyn,IL

**Blanket Grid**
Size: 200'/200'/200' - baseath 60'
Grid Spacing = 30.0' x 30.0'
Values given at 0.0' above grade

Luminaire Type: Green Generation
Rated Lamp Life: 5,000 hours
Avg Lumens/Lamp: 134,000

**CONSTANT ILLUMINATION HORIZONTAL FOOTCANDLES**

| | Entire Grid |
|---|---|
| No. of Target Points | 955 |
| Average | 4.5 |
| Maximum: | 93 |
| Minimum: | 0 |
| Avg/Min. | 22027.94 |
| Max/Min. | 357605.81 |
| UG (Adjacent Pts). | 10.22 |
| CV: | 2.48 |

| | |
|---|---|
| Average Lamp Tilt Factor: | 1.000 |
| Number of Luminaires. | 35 |
| Avg KW over 5,000. | 54.74 |
| Max KW: | 59.5 |

**Guaranteed Performance:** The CONSTANT ILLUMINATION described above is guaranteed for the rated life of the lamp

**Field Measurements:** Averages shall be +/-10% in accordance with IESNA RP-6-01 and CISSE LG4. Individual measurements may vary from computer predictions

**Electrical System Requirements:** Refer to Amperage Draw Chart and/or the "Musco Control System Summary" for electrical sizing.

**Installation Requirements:** Results assume +/- 3% nominal voltage at line side of the ballast and structures located within 3 feet (1m) of design locations.

# Exhibit G

By: Ryan A. Marsh, LC
File #: 122716R10 Date 18-Jul-11

Pole location(s) ✚ dimensions are relative to H.O. reference point(s) ⊗

Not to be reproduced in whole or part without the written consent of Musco Lighting ©1981, 2011 Musco Lighting

# FOOTBALL

musco GREEN GENERATION LIGHTING

GUARANTEED PERFORMANCE

## EQUIPMENT LIST FOR AREAS SHOWN

| Pole | | | | Luminaires | | | | |
|---|---|---|---|---|---|---|---|---|
| QTY | LOCATION | SIZE | GRADE ELEVATION | MOUNTING HEIGHT | LAMP TYPE | QTY / POLE | THIS GRID | OTHER GRIDS |
| 1 | B1 | 70' | - | 70' | 1500W MZ | 8 | 8 | 0 |
| 1 | B2 | 70' | - | 70' | 1500W MZ | 7 | 7 | 0 |
| 2 | C1-C2 | 70' | - | 70' | 1500W MZ | 7 | 7 | 0 |
| 4 | ← TOTALS → | | | | | 29 | 29 | 0 |

## ILLUMINATION SUMMARY

**Football**
Glenbard West High School Softball/Soccer
Glen Ellyn,IL

**Football**
Size: 360' x 160'
Grid Spacing = 30.0' x 30.0'
Values given at 3.0' above grade

Luminaire Type: Green Generation
Rated Lamp Life: 5,000 hours
Avg Lumens/Lamp: 134,000

**CONSTANT ILLUMINATION HORIZONTAL FOOTCANDLES**

| | Entire Grid |
|---|---|
| No. of Target Points: | 72 |
| Average: | 32.7 |
| Maximum: | 41 |
| Minimum: | 26 |
| Avg/Min. | 1.24 |
| Max/Min: | 1.55 |
| UG (Adjacent Pts): | 1.33 |
| CV: | 0.12 |

| | |
|---|---|
| Average Lamp Tilt Factor: | 1.000 |
| Number of Luminaires: | 29 |
| Avg KW over 5,000: | 45.36 |
| Max KW: | 49.3 |

**Guaranteed Performance:** The CONSTANT ILLUMINATION described above is guaranteed for the rated life of the lamp.

**Field Measurements:** Averages shall be +/-10% in accordance with IESNA RP-6-01 and CIBSE LG4. Individual measurements may vary from computer predictions.

**Electrical System Requirements:** Refer to Amperage Draw Chart and/or the "Musco Control System Summary" for electrical sizing.

**Installation Requirements:** Results assume +/- 3% nominal voltage at line side of the ballast and structures located within 3 feet (1m) of design locations.

Exhibit G

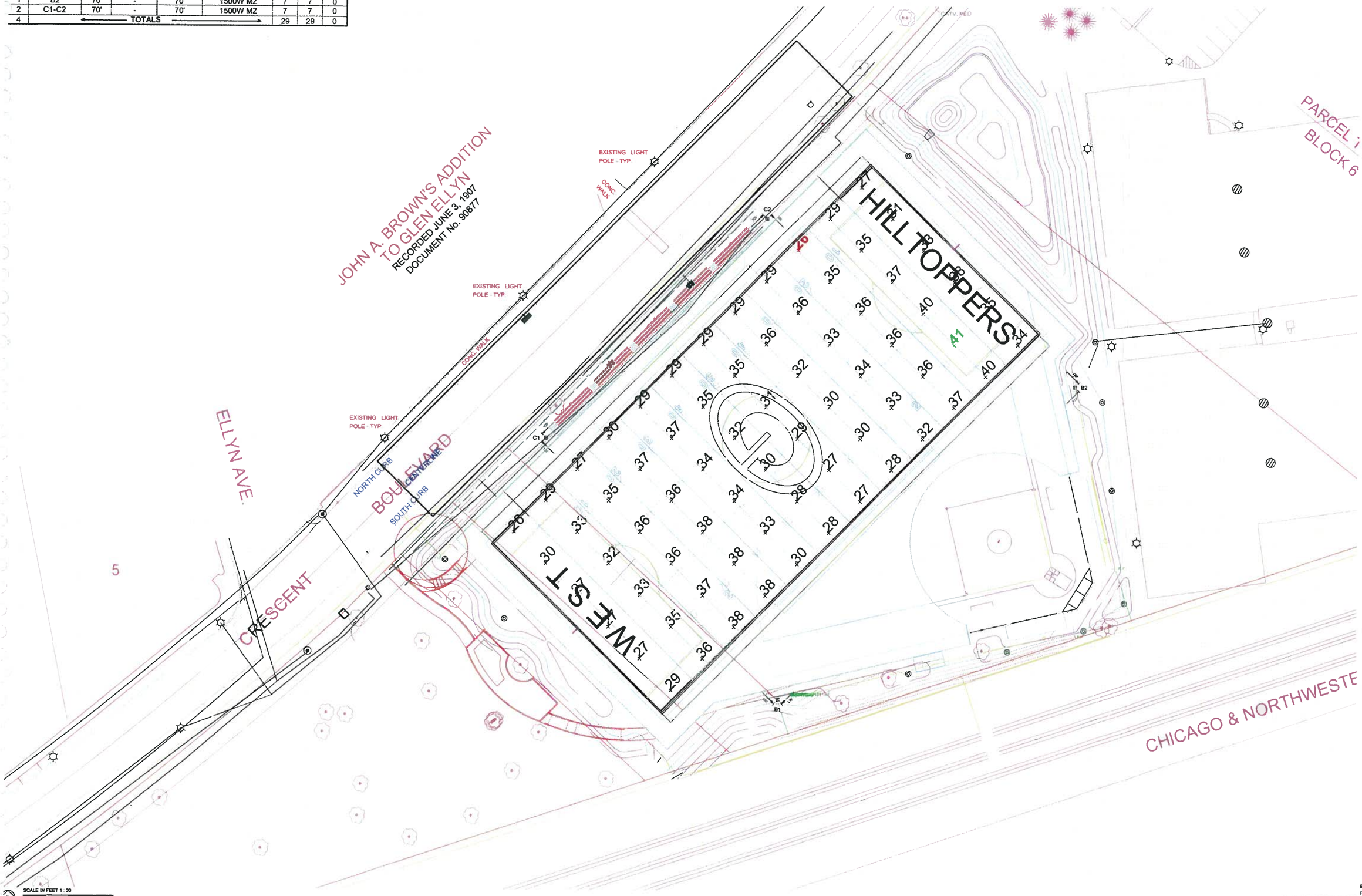


By: Ryan A. Marsh, LC
File #: 122716R10 Date: 18-Jul-11

Pole location(s) & dimensions are relative to C.Z. reference point(s) ©

Not to be reproduced in whole or part without the written consent of Musco Lighting ©1981, 2011 Musco Lighting

# PROPERTY LINE 5' OFFSET

musco
GREEN GENERATION LIGHTING
GUARANTEED PERFORMANCE

**EQUIPMENT LIST FOR AREAS SHOWN**

| Pole | | | | Luminaires | | | | |
|---|---|---|---|---|---|---|---|---|
| QTY | LOCATION | SIZE | GRADE ELEVATION | MOUNTING HEIGHT | LAMP TYPE | QTY / POLE | THIS GRID | OTHER GRIDS |
| 2 | A1-A2 | 60' | - | 60' | 1500W MZ | 3 | 3 | 0 |
| 1 | B1 | 70' | - | 70' | 1500W MZ | 8 | 8 | 0 |
| 1 | B2 | 70' | - | 70' | 1500W MZ | 7 | 7 | 0 |
| 2 | C1-C2 | 70' | - | 70' | 1500W MZ | 7 | 7 | 0 |
| 6 | ← TOTALS → | | | | | 35 | 35 | 0 |

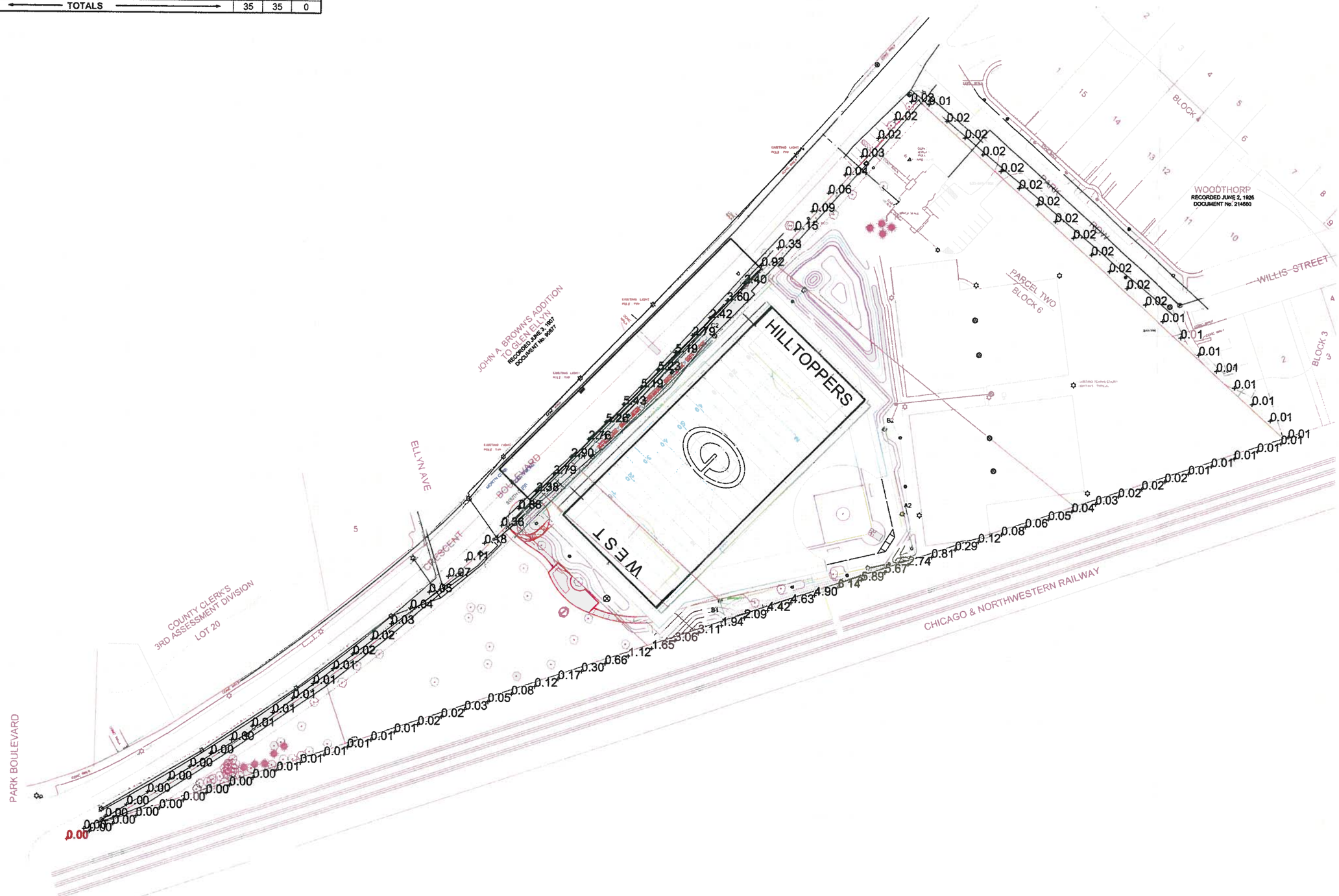


**ILLUMINATION SUMMARY**

**Property Line 5' Offset**
Glenbard West High School Softball/Soccer
Glen Ellyn,IL

**Property Line 5' Offset**
Grid Spacing = 30.0'
Values given at 0.0' above grade

| | |
|---|---|
| Luminaire Type | Green Generation |
| Rated Lamp Life: | 5,000 hours |
| Avg Lumens/Lamp: | 134,000 |

**CONSTANT ILLUMINATION HORIZONTAL FOOTCANDLES**

| | Entire Grid |
|---|---|
| No. of Target Points: | 120 |
| Average: | 0.863 |
| Maximum: | 6.14 |
| Minimum: | 0.00 |

| | |
|---|---|
| Average Lamp Tilt Factor: | 1.000 |
| Number of Luminaires: | 35 |
| Avg KW over 5,000: | 54.74 |
| Max KW: | 59.5 |

**Guaranteed Performance:** The CONSTANT ILLUMINATION described above is guaranteed for the rated life of the lamp.

**Field Measurements:** Averages shall be +/-10% in accordance with IESNA RP-6-01 and CISSE LG4. Individual measurements may vary from computer predictions.

**Electrical System Requirements:** Refer to Amperage Draw Chart and/or the "Musco Control System Summary" for electrical sizing.

**Installation Requirements:** Results assume +/- 3% nominal voltage at line side of the ballast and structures located within 3 feet (1m) of design locations.

# Exhibit G

SCALE IN FEET 1 : 60

By: Ryan A. Marsh, LC
File #: 122716R10 Date: 18-Jul-11
Pole location(s) & dimensions are relative
Not to be reproduced in whole or part without the written

# Memorial Field Lighting

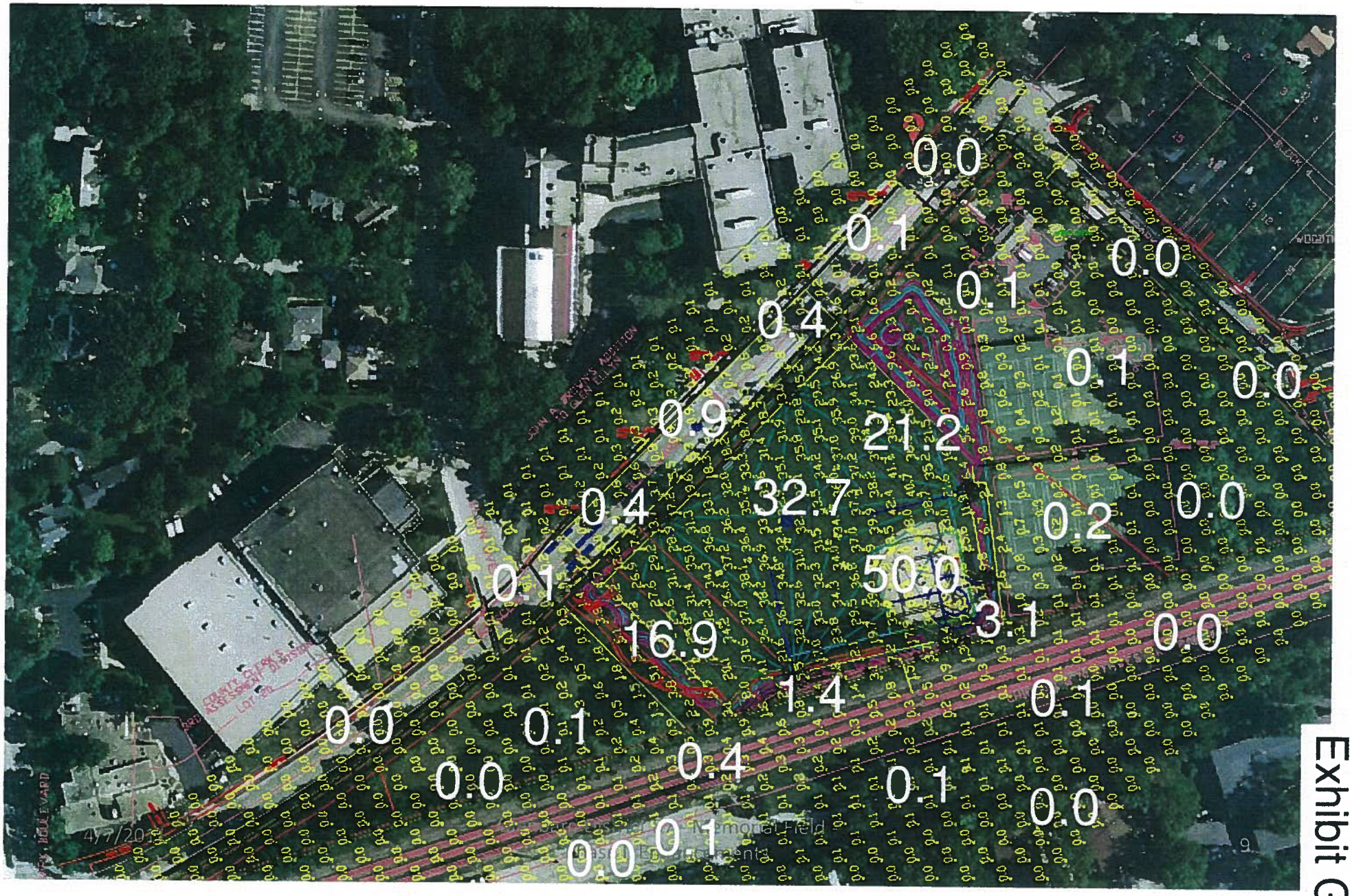


Exhibit G

# Exhibit G

Typical Light–Structure Green™ System Detail – 10 Luminaires

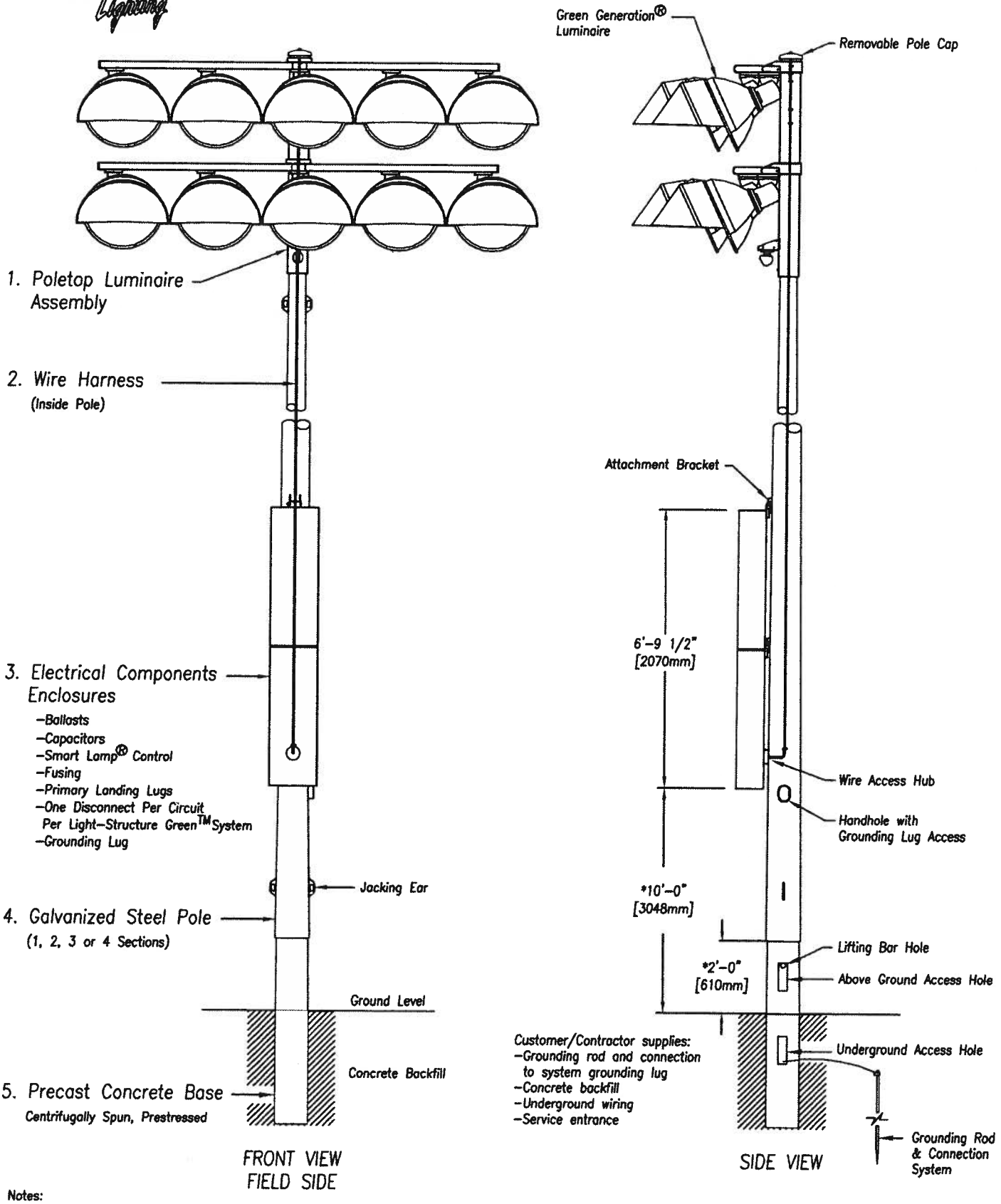


Notes:
1. This drawing is not to scale.
2. * This dimension for reference only. Variances may occur depending on steel pole tolerances, concrete tolerances, galvanizing thickness, hole depth occuracy.
3. Musco provides a base installation bar, an installation level modified for taper, and installation wedges.
4. Provisions for auxiliary equipment such as speaker or security lighting can be incorporated.
5. Copyright 1991, 2007, 2008 Musco Lighting. Patents issued and pending.

LSG–10

# Exhibit G
## Luminaire Assembly

Light·Structure GREEN™

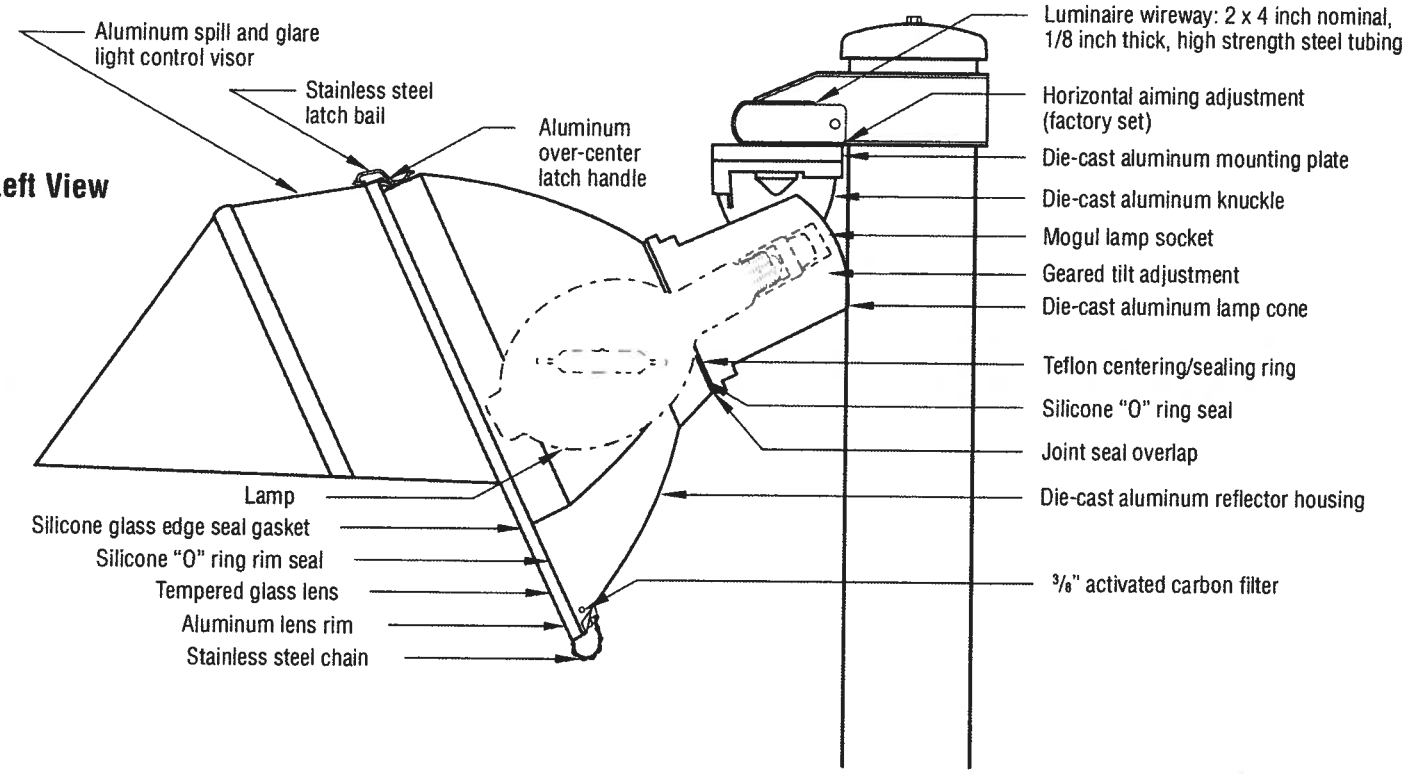


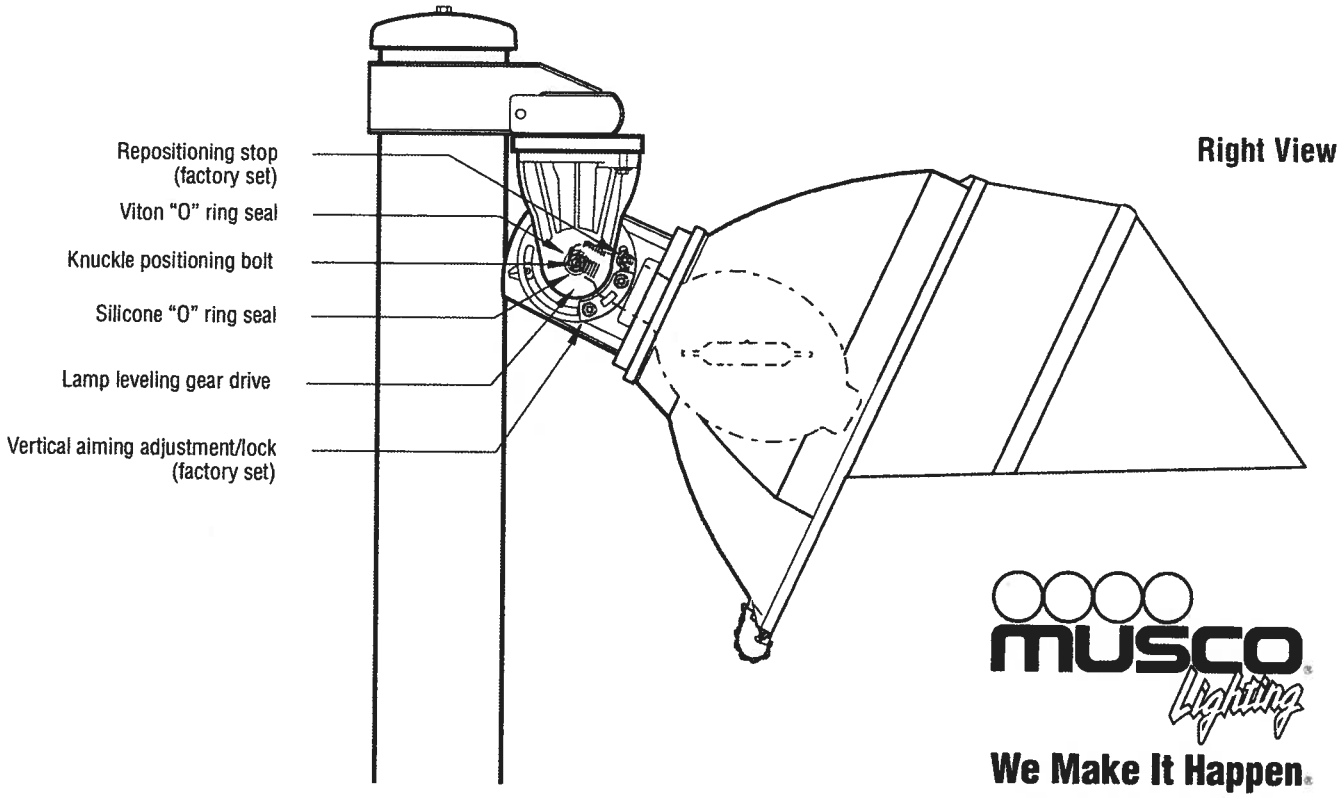


MUSCO Lighting

**We Make It Happen.**

800/825-6030
www.musco.com
lighting@musco.com

Musco products referenced or shown are protected by one or more of the following U.S. Patents: 4450507; 4725934; 4729077; 4811181; 4816974; 4947303; 4994718; 5012398; 5075828; 5134557; 5161883; 5211473; 5229681; 5377611; 5398478; 5423281; 5426577; 5600537; 5707142; 5794387; 5800048; 5816691; 5856721; 6036338; 6203176; 6250596; 6340790; 6398392; 6446408; 6692142; D337168; D353797; D353911; D411096. Australia Patents: 708912; Canada Patents: 70479; 73755; 74939; 89366; 2009749; 2026850; 2027033; 2035014; 2060585; 2110014; 2204958; 2200511; 2200515; 2217872; 2378279. EPC Patents: 440531; 821776. Germany Patents: 69601867.5. Mexico Patents: 175863; 183225. New Zealand Patents: 307705; 333806. South Korea Patents: 405147. Other patents pending.

© 2005 Musco Lighting · SLA1

# Smart Lamp® Operating System

## 1500 Watt Metal Halide Lamp (Clear)
## Technical Data Sheet

Proprietary to Musco Lighting

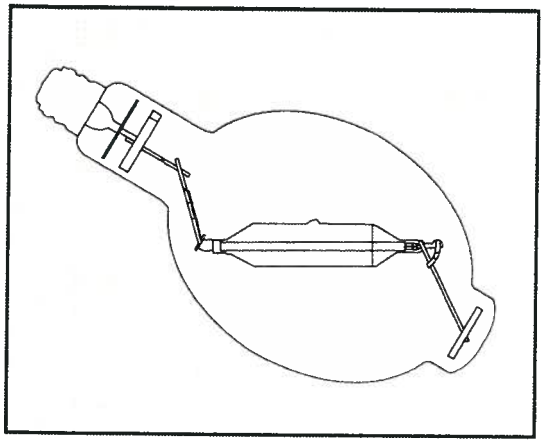

### Ordering Information

| | |
|---|---|
| Ordering Code | LA-30Z-1 |
| ANSI Designation | M48 |
| Description | MH1500 MZ |
| Lamp Type | HID: Metal Halide |

### Physical Characteristics

| | |
|---|---|
| Bulb Size | BT-56 |
| Bulb Finish | Clear |
| Base | Mogul Screw Position Oriented |
| Maximum Overall Length (MOL) | 15⅜" (391mm) |
| Light Center Length (LCL) | 9⅛" (232mm) |
| Arc Tube Lighted Length | 3 5/16" (84mm) |
| Arc Tube Material | Fused Silica |
| Maximum Permissible Bulb Temperature | 400°C (752°F) |
| Maximum Permissible Base Temperature | 210°C (410°F) |

### Photometric Operating Characteristics[1]

| | |
|---|---|
| System Rated Constant Lumens Over Life [2] | 134,000 |
| Operating Position | Arc Tube Horizontal |
| Lamp Replacement Interval, Hours [3] | 5000 |
| Correlated Color Temperature (Approximate) | 4200K |
| CIE Chromaticity Coordinates (Approximate) | x-.370, y-.390 |
| Color Rendering Index ($R_a$) | 65-70 |

### Electrical Data

| | |
|---|---|
| Average Lamp Wattage Over Operating Life [2] | 1450 |
| Warm-up Time to 80% of Output | 3-5 Minutes |
| Re-strike Time for Hot Lamp | 10-15 Minutes |
| Lamp Operating Current (Max. rms Amps) | 6.0 |
| Ballast Type | ANSI M48 |
| Minimum Starting Temperature | -30°C |

Footnotes:

(1) Operating Characteristics are per the Musco Smart Lamp(TM) Operating System on a commercial ballast with arc tube horizontal. Lamp lumen measurements in accordance with IESNA LM-51-00. Lamp color data in accordance with IESNA LM-58-94. Lamp operating cycle of five hours per start to reflect expected field use in the sports lighting industry.

(2) Lamp starts out at a reduced wattage and increases over life to offset lumen loss as lamp ages. Average wattage over life is 1450 watts.

(3) Beyond 5,000 hours is the time when constant lumens are no longer maintained by the Smart Lamp™ Operating System. Average lamp life before failure is substantially greater than 5,000 hours as tested and defined per IESNA LM-47-01 with five hours per start.

www.musco.com

©2005, 2010 Musco Sports Lighting, LLC · Patents Issued & Pending.

## Recommended Warnings, Cautions and Operating Instructions

⚠ **WARNING:** These lamps can cause serious skin burn and eye inflammation from short wave ultraviolet radiation if outer envelope of the lamp is broken or punctured. Do not use where people will remain for more than a few minutes unless adequate shielding or other safety precautions are used. Certain lamps that will automatically extinguish when the outer envelope is broken or punctured are commercially available. This lamp complies with FDA radiation performance standard USA:21CFR 1040.30 Canada:SOR/DORS/80-381

**If the outer bulb is broken or punctured, turn off at once and replace the lamp to avoid possible injury from hazardous short wave ultraviolet radiation. Do not scratch the outer bulb or subject it to pressure as this could cause the outer bulb to crack or shatter. A partial vacuum in the outer bulb could cause glass to fly if the envelope is struck.**

⚠ **WARNING:** The arc tube of metal halide lamps are designed to operate under high pressure and at temperatures up to 1000°C and can unexpectedly rupture due to internal or external factors such as a ballast failure or misapplication. If the arc tube ruptures for any reason, the outer bulb may break and pieces of extremely hot glass might be discharged into the surrounding environment. If such a rupture were to happen, **THERE IS A RISK OF PERSONAL INJURY, PROPERTY DAMAGE, BURNS AND FIRE.**

**RELAMP FIXTURES AT OR BEFORE THE END OF RATED LIFE. Allowing lamps to operate until they fail is not advised and may increase the possibility of inner arc tube rupture.**

**CAUTION:** TO REDUCE THE RISK OF PERSONAL INJURY, PROPERTY DAMAGE, BURNS AND FIRE RESULTING FROM AN ARC TUBE RUPTURE, THE FOLLOWING LAMP OPERATING INSTRUCTIONS MUST BE FOLLOWED.

Hg - LAMP CONTAINS MERCURY
Manage in Accord with Disposal Laws
See www.lamprecycle.org or call 1-800-825-6020

## Lamp Operating Instructions:

1. Turn off lamps at least once a week for at least 15 minutes in systems which are operating on a continuous basis (24 hours/day-7days/week). FAILURE TO TURN OFF LAMPS FOR THE MINIMUM RECOMMENDED TIME MAY INCREASE THE POSSIBILITY OF AN INNER ARC-TUBE RUPTURE.
2. RELAMP FIXTURES AT OR BEFORE THE END OF RATED LIFE. Allowing lamps to operate until they fail is not advised and may increase the possibility of inner arc tube rupture.
3. Before lamp installation/replacement, shut power off and allow lamp and fixture to cool to avoid electrical shock and potential burn hazards.
4. To meet lamp performance, use only with Musco supplied equipment.
   A. Operate lamp with proper circuits and auxiliary equipment.
   B. Operate lamp only within specified limits of operation.
   C. For total supply load, refer to manufacturers electrical data.
5. Time should be allowed for lamps to stabilize in color when turned on for the first time. This may require several hours of operation, with more than one start. Lamp color is also subject to change under conditions of excess vibration or shock, and color appearance may vary between individual lamps.
6. Lamps may require 10 to 20 minutes to re-light if there is a power interruption.
7. Take care in handling and disposing of lamps. If an arc tube is broken, avoid skin contact with any of the contents or fragments.
8. Lamp is designed to operate per the Musco Smart Lamp® operating system. Performance when operated by a different lighting system is not guaranteed. Also note the following:
   - Do not use this lamp in a fixture that contains a pulse start metal halide ballast and is specifically designed for use with pulse start metal halide lamps.
   - Use only in an enclosed fixture capable of withstanding particles of glass having temperatures up to 1000° C.
   - If a lamp bulb support is used, be sure to insulate the support electrically to avoid possible decomposition of the bulb glass.
   - Protect lamp base, socket, and wiring against moisture, corrosive atmospheres, and excessive heat.

©2005, 2010 Musco Sports Lighting, LLC · Patents issued & pending.

Exhibit H



GLENBARD WEST HIGH SCHOOL – MEMORIAL FIELD
GLEN ELLYN, ILLINOIS
Legat Architects Project No. 210090.00
May 20, 2011 (Revised, July 25, 2011)

**PROPOSED TIME LINE/ Construction/ Phasing Schedule:**

All of the requested Variances are part of the overall campus master plan and are dependent on project funding as well as some other potential projects being considered by the Village of Glen Ellyn. Currently, there is no funding in place for the listed variances. Additionally, future projects such as the Crescent Road Safety Improvement Plan are being considered by the Village. These projects are not yet finalized and are out of the District's immediate control.

Based on the above, the District is requesting that the requested Variances be in force for a period of 5 years from the date of anticipated approval.

Exhibit I

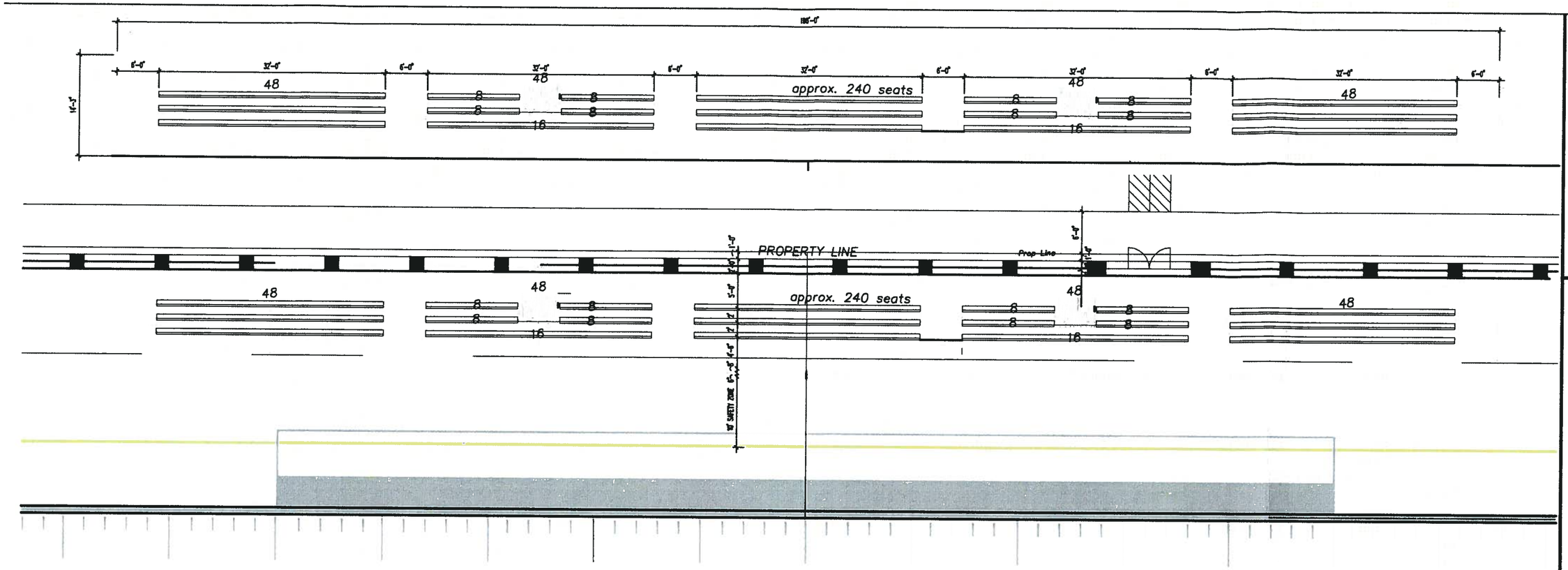


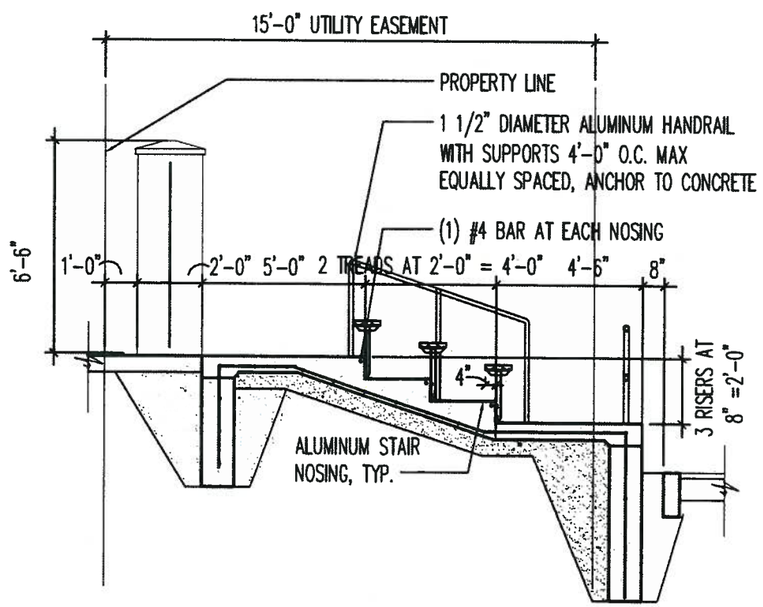


PLAN AND SECTION
SCALE: N.T.S.

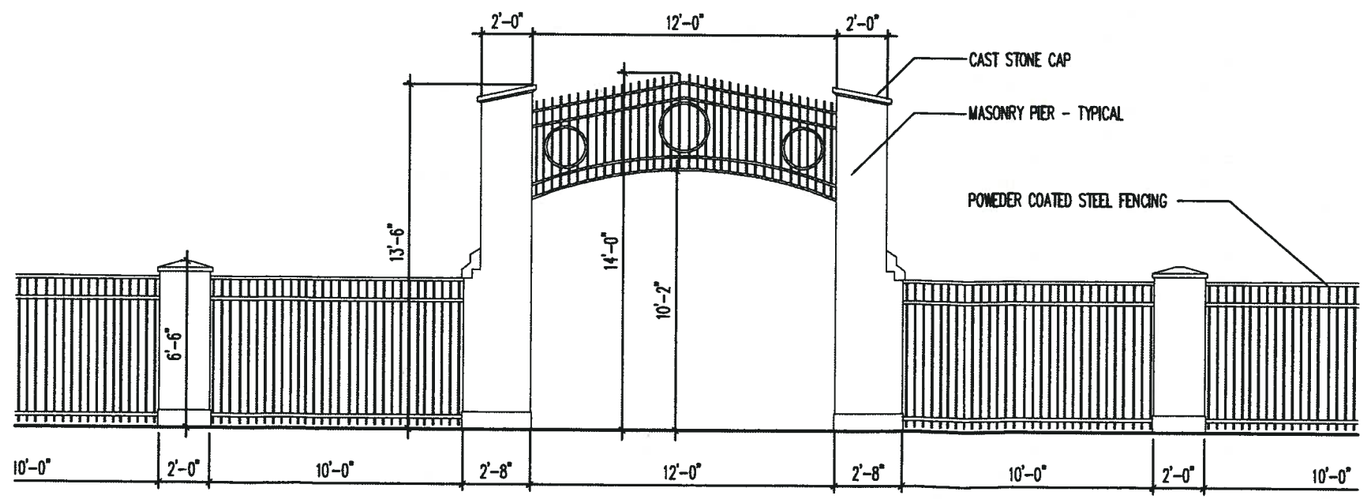


MAY 13, 2011
LEGATARCHITECTS
2015 SPRING ROAD SUITE 175
OAK BROOK, ILLINOIS 60523
(630) 990-3535

Exhibit I

BLEACHER SECTION AND PLAN

# Crescent Parking Enhancements

## Parking Revisions - Implemented

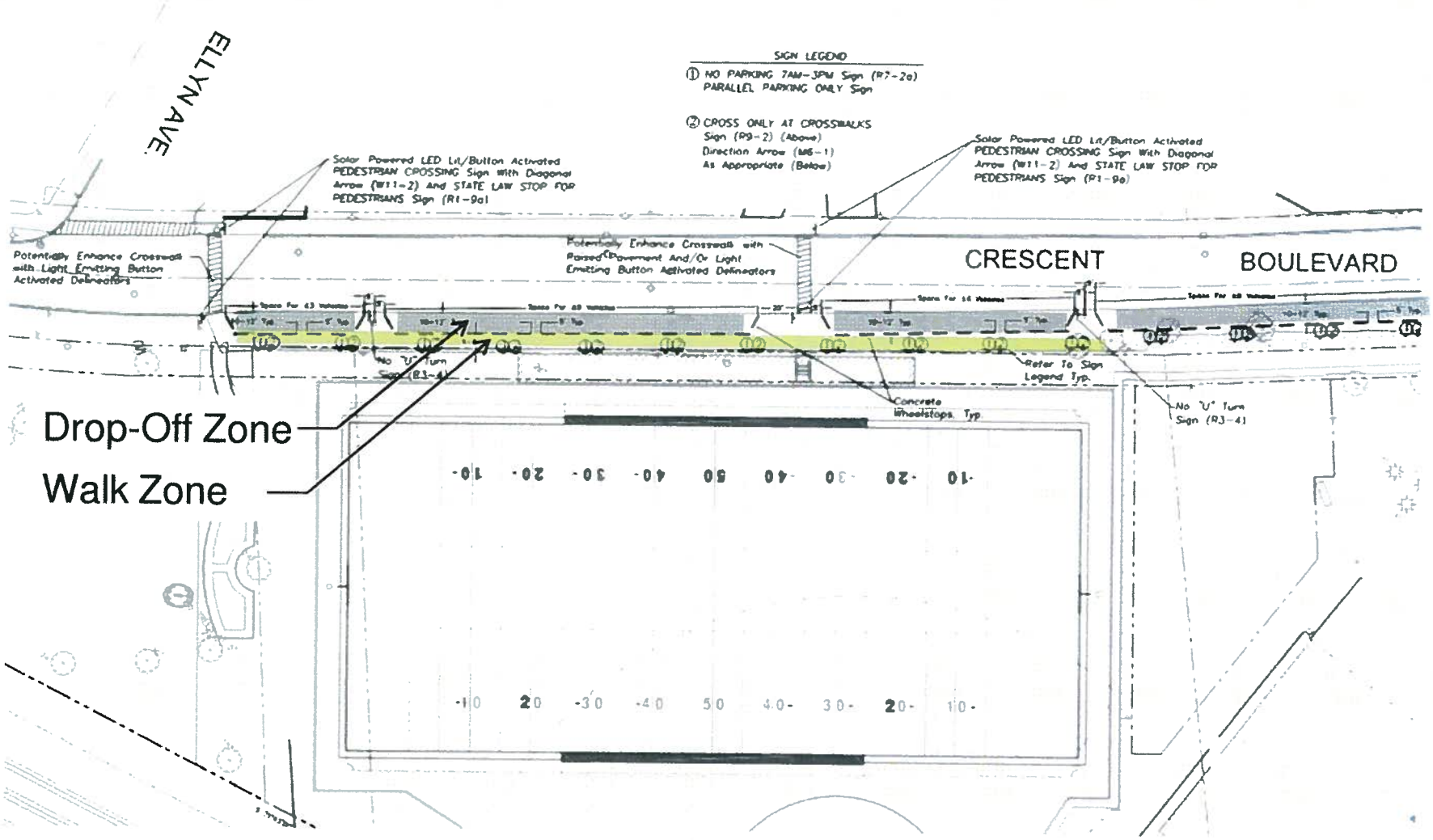


Exhibit J

# Crescent Parking Enhancements

## Parking Revisions - Implemented

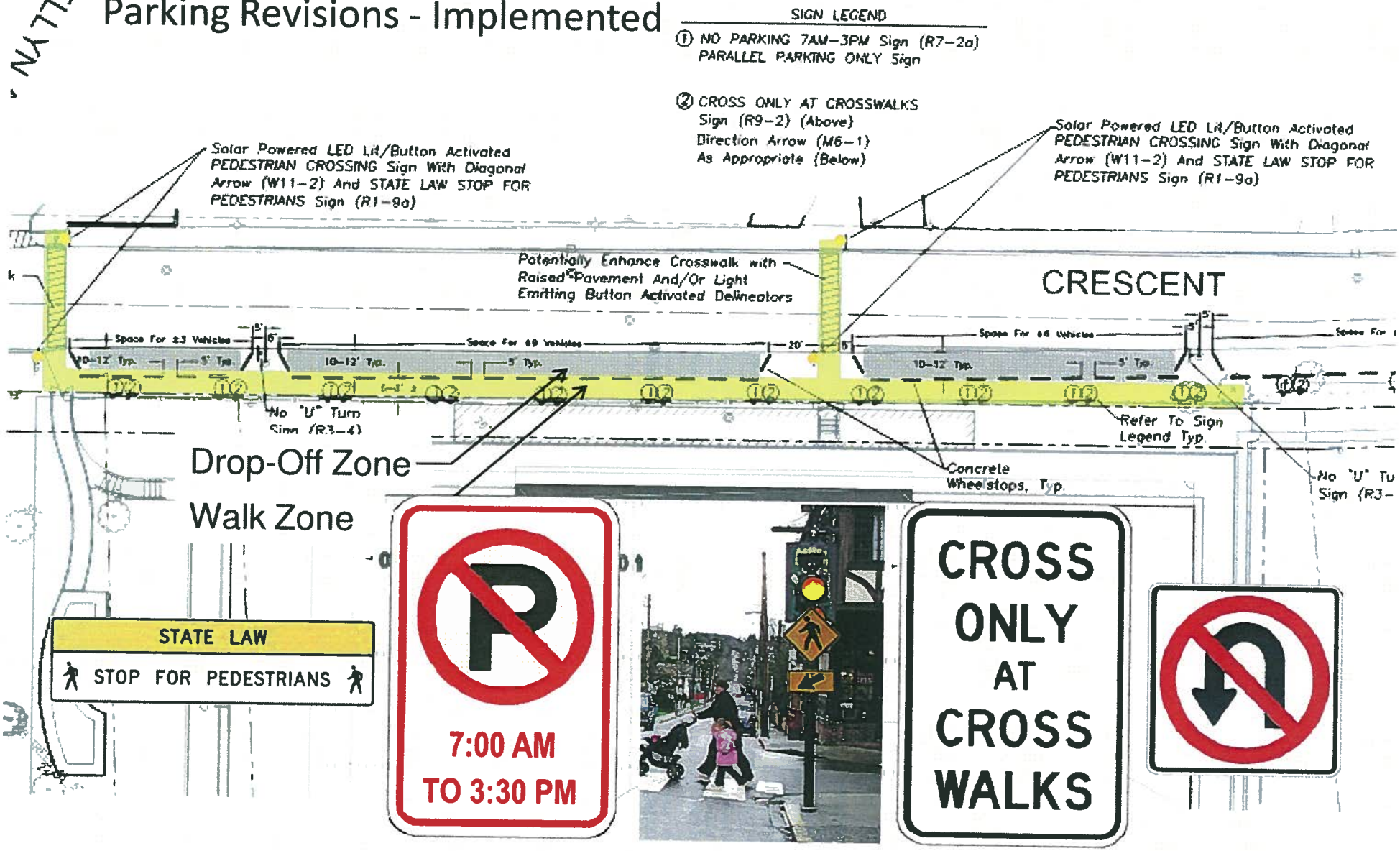


Exhibit J

# Crescent Parking Enhancements

Exhibit J

# Requested Variances

Exhibit K

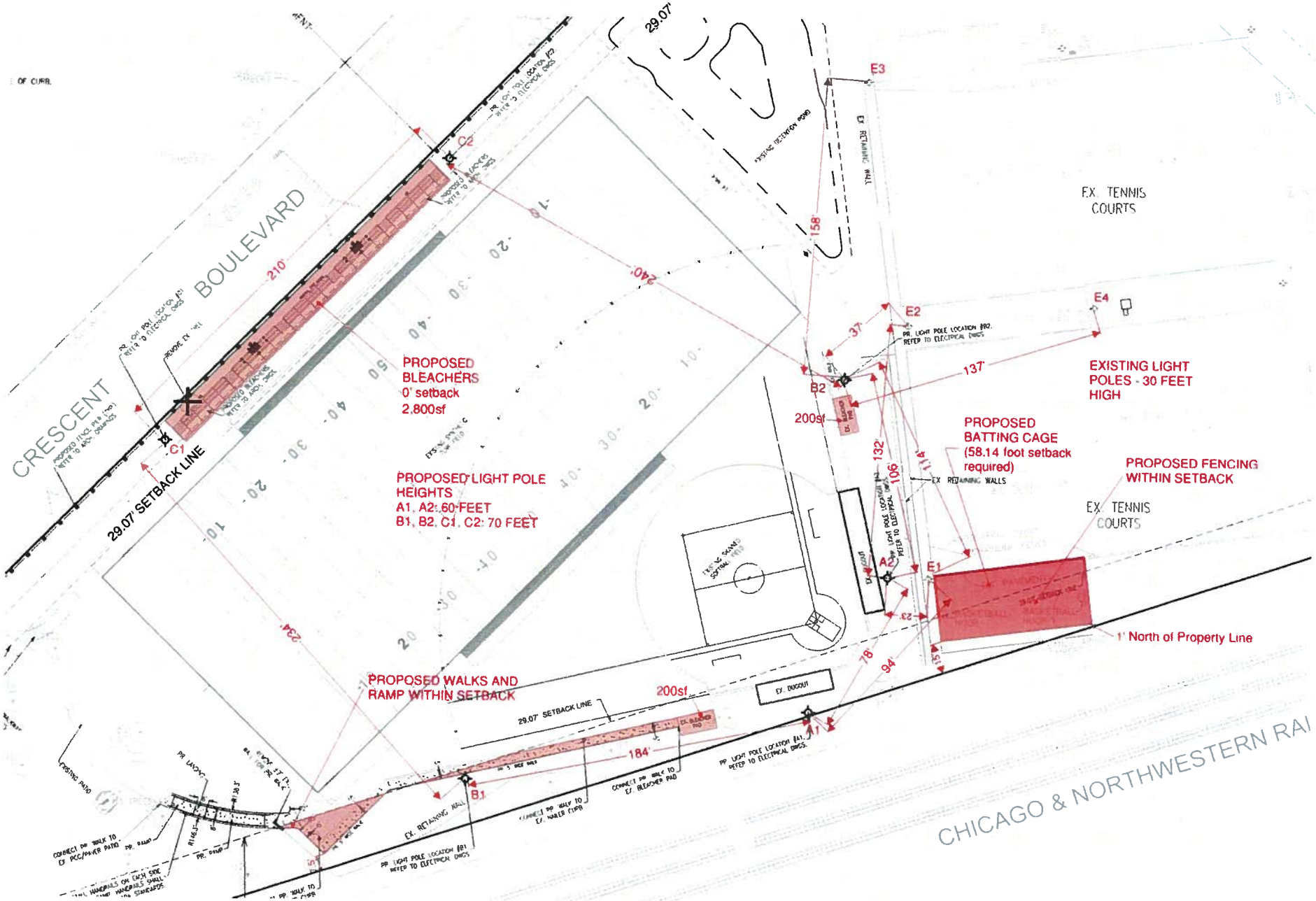

# Existing Landscaping

Exhibit L

# Existing Landscaping

Exhibit L

# Existing Landscaping

Exhibit L

# Field Lighting

**Old Generation**

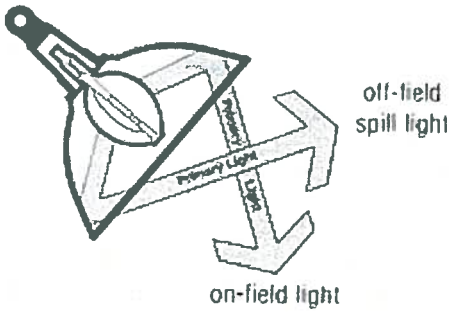


Standard Symmetrical Reflector

**New Technology**

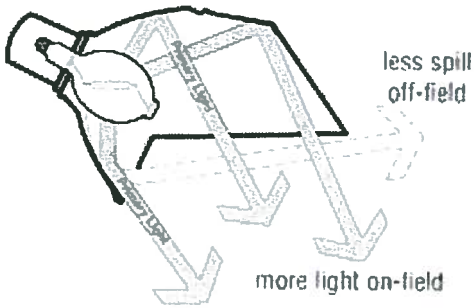


Redirects Off-Field Spill Light

New high efficiency lighting with light shields to control light spill

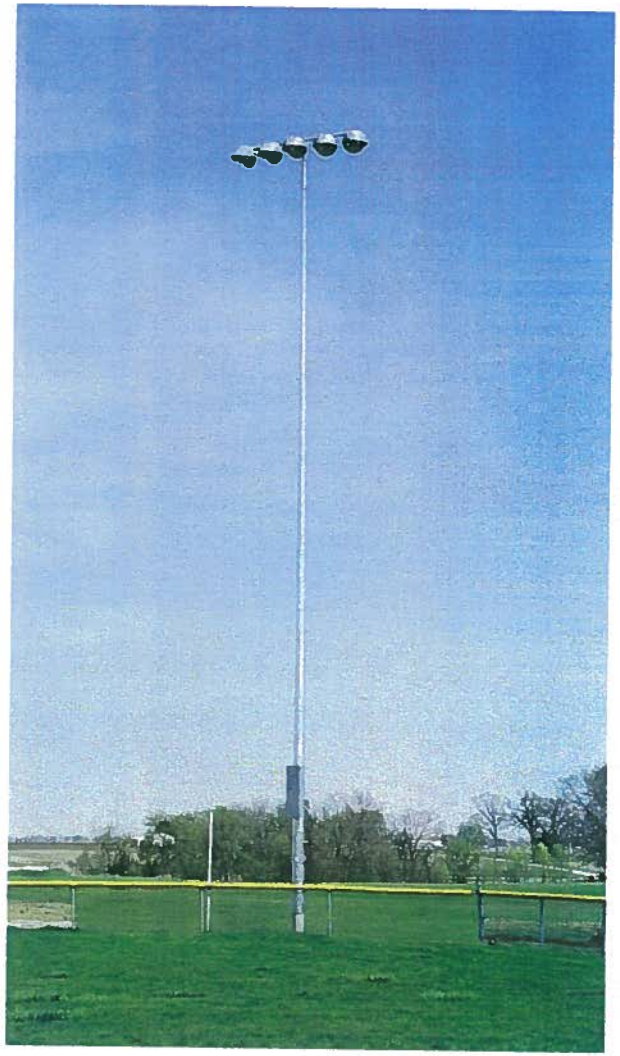

Exhibit M

# Field Lighting

## Reflector Design

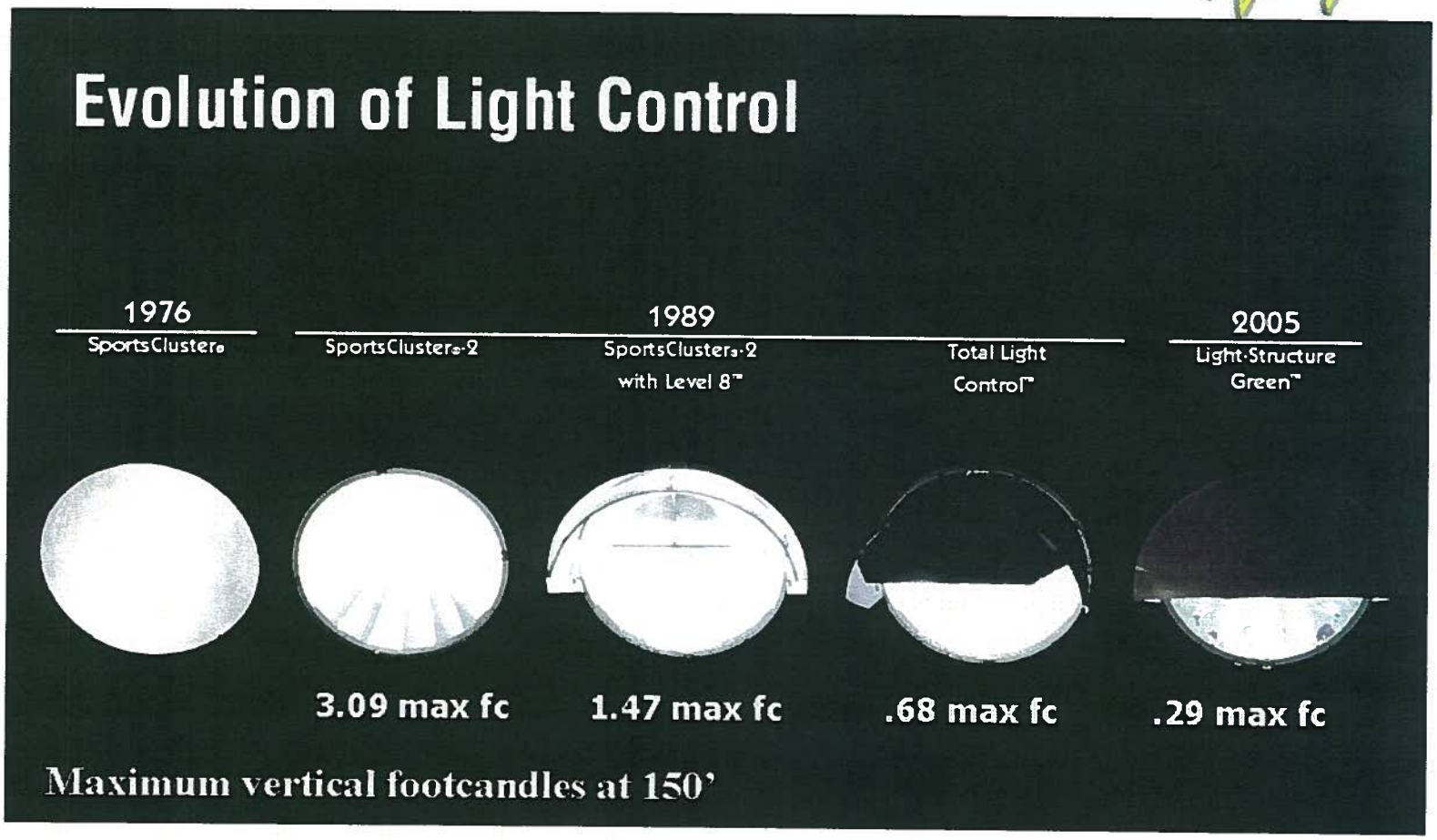


Exhibit M

Before and After photographs taken with same camera at same settings:
Nikon D2 camera with 14mm lens; shutter speed - 1/4 sec.; lens aperture - f/2.8; ISO - 125

**25-Year Energy Savings: $82,000**

**BARRON COLLIER HIGH SCHOOL COMPLEX**
**Naples, FL**
325-foot baseball diamond – 50/30 constant footcandles
255/325/255-foot softball diamond – 50/30 constant footcandles

System Energy Consumption:
Prior technology – 188 kW
New technology – 110 kW

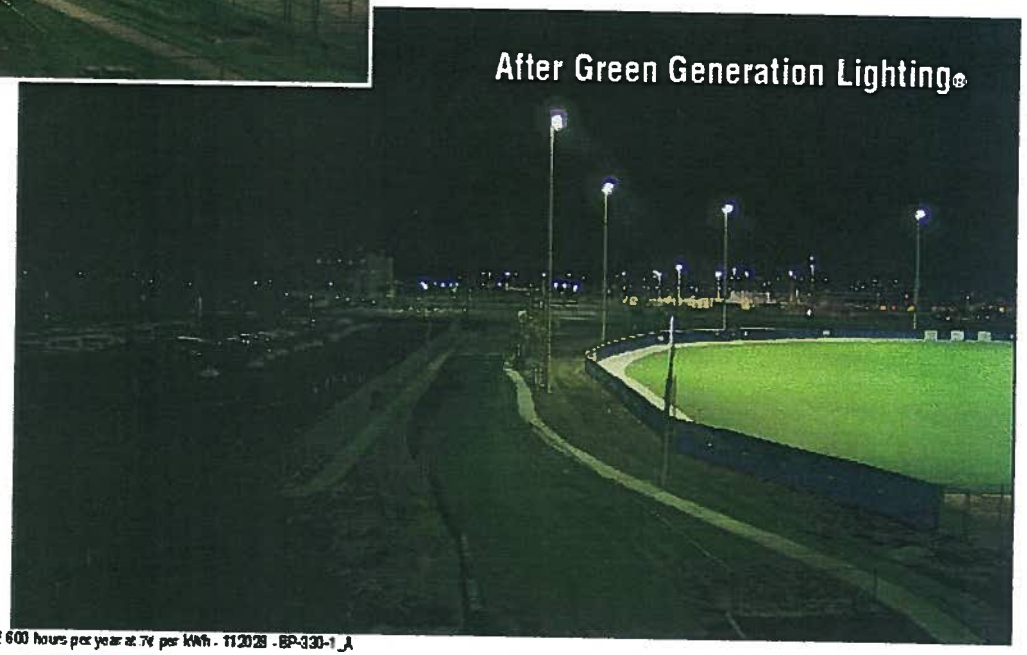


©2006 Musco Lighting. Patents issued and pending. Savings based upon customer estimated usage of 600 hours per year at 7¢ per kWh. 112028 - BP-330-1_A

Light-Structure

Exhibit M

Metea Valley High School - Visual

Exhibit M

Baseball Field - Visual

Exhibit M

JAMES J. BENES AND ASSOCIATES, INC.
950 Warrenville Road ▪ Suite 101 ▪ Lisle, Illinois ▪ 60532
Tel. (630) 719-7570 ▪ Fax (630) 719-7589

Exhibit N

# MEMORANDUM

Date: July 25, 2011

To: Michele Stegall
Village Planner
Village of Glen Ellyn

From: James E. Darnell, PE, CFM
Vice President

Re: Memorial Field Lighting Phase II
Crescent Boulevard at Park Row
Job No. 1115.023

At your request we have reviewed the Zoning Variations request and revised application which includes the following items:

1. Photometric Site Plans (7 sheets), prepared by Musco Lighting of Oskaloosa, Iowa, and dated July 18, 2011.

Glenbard Township High School District 87 recently constructed a synthetic turf surface at Memorial Field, located on the Glenbard West Campus. As part of the campus master plan, additional enhancements to Memorial Field are being proposed in order to increase utilization of the facility. Among the proposed enhancements is the installation of field lighting to extend the hours of usage while providing a safe environment for the athletes. The proposed enhancements will lessen the need to bus student athletes to off-site facilities. We offer the following comments related to the proposed field lighting:

**Existing Conditions** Memorial Field is located on the southeast side of Crescent Boulevard, southwest of Park Row, and across the street from Glenbard West High School. The east portion of the site is currently occupied by tennis courts, an office & garage building, a small parking lot, a stormwater detention pond, and a basketball court. The west portion of the site is vacant and undeveloped. The central portion of the site is occupied by a synthetic turf athletic field, a softball field with a dirt infield, and dugouts. The surface of the athletic field is approximately three feet lower than the Crescent Avenue pavement and is also lower than the railroad tracks to the south.

**Proposed Lighting** The Illuminating Engineering Society of North America (IESNA), in their Technical Report RP-33, Lighting for Exterior Environments, states that when sports fields are adjacent to roadways, the sports lighting should not contribute glare onto the roadways. When sports fields are located adjacent to residential areas, the overall brightness should be carefully controlled. Poles should be at least 70 feet high for aerial

sports, such as baseball or softball. Floodlights should not be aimed above 62 degrees and should use internal louvers and external shields to help minimize light pollution.

The lighting system has been designed to illuminate both the football / soccer field and the softball field, and includes six light poles with a total of 35 luminaires. The luminaires are 1500 watt metal halide fixtures and are provided with a spill & glare light control visor. The proposed Musco lights are energy efficient and the energy cost to light the fields is estimated to be less than $5 per hour. The proposed lighting system addresses the above recommendations of IESNA RP-33.

**Hours of Operation** It is District 87's intent to require all athletic activity to conclude by 9:00 pm, with authorization to keep the lights on until 9:30 pm. This policy would be in force Monday through Saturday. Field lighting will not be permitted on Sundays. Generally, the lights will be turned on one half hour before dusk and will remain on until 9:30 pm. Therefore, the hours of operation will vary with the calendar. In the middle of November, the lights will operate from 4:15 pm to 9:30 pm, or 5h-15m per day. At the end of June and beginning of July, the lights would not be turned on until 8:00 pm, so they will be operating only 1h-30m per day. There will be no light usage on Sundays. The tables in Exhibit A of the previously submitted documents give more detail regarding hours of operation and anticipated field activities for specific weeks during the calendar year.

**Lighting Levels for Football & Soccer Fields** The industry standard average illumination for football and soccer fields varies. IESNA Technical Report RP-6 recommends the following:

- Class I Competition – 5,000 to 10,000 spectators 100 f/c football / 75 f/c soccer
- Class II Competition – up to 5,000 spectators 50 f/c football / 50 f/c soccer
- Class III Competition – some spectators 30 f/c football / 30 f/c soccer
- Class IV Recreational – no spectators 20 f/c football / 20 f/c soccer

For this application, Class III lighting is appropriate. As the softball outfield overlaps the football / soccer field, it is unlikely they will be used simultaneously. There is no need to light the softball field when the football / soccer field is in use, so the calculations are based on only 29 of the 35 luminaires being on. The proposed lighting for the football and soccer field provides an average illumination of 32.7 f/c, which closely matches the Class III recommendations.

**Lighting Levels for Softball Fields** Back in the 1980s and 1990s, the standard average illumination for softball fields varied from 10 f/c infield & 7 f/c outfield for recreational use, up to 50 f/c infield & 30 f/c outfield for professional play. Since that time, recommended lighting levels have increased. IESNA Technical Report RP-6 now recommends the following:

- Class I Competition – 5,000 to 10,000 spectators 150 f/c infield / 100 f/c outfield
- Class II Competition – up to 5,000 spectators 100 f/c infield / 70 f/c outfield
- Class III Competition – some spectators 50 f/c infield / 30 f/c outfield



Exhibit N

- Class IV Recreational – no spectators 30 f/c infield / 20 f/c outfield

For this application, Class III lighting is appropriate. There is no need to light the football / soccer field when the softball field is in use, so the calculations are based on only 28 of the 35 luminaires being on. The proposed lighting for the softball field provides an average illumination of 50.4 f/c for the infield and 33.8 f/c for the outfield, which closely matches the Class III recommendations.

**Impacts to Vehicular Traffic on Crescent Boulevard** The proposed sports lighting should be designed so that excessive light does not spill over onto the pavement. It is important to maintain uniformity along the roadway so that drivers do not need to traverse "hot" spots. As a drivers enter a brightly lit area, their eyes take time to adjust to the higher lighting level. As they pass the brightly lit area, their eyes will take even longer to adjust back to the normal lighting level. This is especially undesirable where a high level of pedestrian traffic is anticipated, such as near a sporting event. The proximity of Crescent Boulevard to the well-lit athletic fields was thus a concern. By using internal louvers and external shields, the proposed light fixtures are able to place the required illumination on the field while greatly reducing light trespass onto the street.

The existing streetlights on Crescent Boulevard are located on the northwest side of the street only. We inspected the street after dark and measured the existing illumination on the pavement with a light meter. We found that the existing lighting level varied from 0.0 to 1.1 f/c along the northwest edge of pavement, from 0.0 to 0.8 f/c along the centerline, and from 0.0 to 0.3 f/c along the southeast edge of pavement. The average illumination is 0.19 f/c, which is substantially less than the 0.9 to 1.2 f/c normally recommended for a street like this. The lighting levels would be a bit brighter if several low tree limbs were pruned, but the southeast edge of pavement would still be relatively dark.

Fortunately, the light spill from the athletic fields will be brightest along the southeast edge of pavement, complementing the existing lighting. The submitted photometric calculations are based on all 35 luminaires being on, and show that the light spill will vary from 0.1 to 0.4 f/c along the northwest edge of pavement, from 0.2 to 0.7 f/c along the centerline, and from 0.5 to 2.6 f/c along the southeast edge of pavement. The average illumination is 0.75 f/c. Attached is a spreadsheet created to add the existing lighting to the proposed spill light. The total illumination on the pavement, with all athletic lighting turned on, will vary from 0.3 to 1.4 f/c along the northwest edge of pavement, from 0.3 to 1.3 f/c along the centerline, and from 0.6 to 2.6 f/c along the southeast edge of pavement. The average illumination will be 0.95 f/c, which is close to the recommended 0.9 to 1.2 f/c. The average to minimum uniformity ratio is only 2.0 to 2.2, so the bright spot along the southeast edge of pavement should not cause ocular discomfort. The light spill from the proposed athletic field lighting will bring the illumination levels on the pavement up to a recommended level while the potential for pedestrian crossings is highest, and will not have a negative impact on passing motorists.



Exhibit N

**Impacts to Neighbors** The closest residential properties to Memorial Field are the single-family homes on the other side of Park Row (400 feet from the football / soccer field), apartment buildings on the south side of the railroad tracks and the Illinois Prairie Path (250 feet from the softball field), and single-family homes southwest of the apartments (the nearest one 260 feet from the football / soccer field). The photometric plan in the submittal shows that the illumination along the Park Row right-of-way will be zero. The bright spot along the south property line will be 8.5 f/c, but the illumination along the south railroad track will be 0.3 f/c or less, dropping to 0.1 f/c on the south side of the Illinois Prairie Path. Illumination provided by the existing light poles along the Prairie Path is unknown. While the nearby residents may perceive the lighting on Memorial Field to be bright, the illumination will be focused and stray light trespass will be kept to a minimum. It does not appear that the proposed lighting system will provide any measurable illumination on any residential properties.

**Existing Tennis Court Lighting** The existing tennis courts are currently illuminated by multiple floodlights on nine 30-foot high poles. The submittal states that the lights were installed by the park district when the tennis courts were constructed; and that these lights have no shielding. It also states that there are currently no restrictions on the time when the lights may be used. It is our understanding that District 87 is willing to meet with the Village at a future time to discuss retrofitting the existing lights and restricting the hours of usage to the same hours as the other athletic fields on the property.

While we do not have photometric information for the existing tennis court lighting, we estimate that their contribution to light levels on the new athletic fields will be negligible. They may add 0.1 to 0.3 f/c at the east end of the fields, but the property lines to the northwest (Crescent Boulevard) and southeast (the railroad tracks) of the new fields are too far away, and the impact of the tennis court lights at those locations will be zero.

**Requested Variances** Installation of the proposed field lighting will require three variances from the Village Code. The specific variance requests and their locations are outlined in Exhibit C of the previously submitted report. The brightest spot along the north property line, with all 35 luminaires turned on, will be 7.32 f/c at the property line and 5.43 f/c five feet past the property line. The brightest spot along the south property line, with all 35 luminaires turned on, will be 8.49 f/c at the property line and 6.14 f/c five feet past the property line. These variances are required in order to meet the illumination levels and uniformity ratios which are recommended for lighting athletic fields.

Please contact us if you have any questions or require additional information.

-- end --



Exhibit N

Exhibit O

**Village President**
Mark Pfefferman

**Trustees**
Peter E. Cooper
Robert Friedberg
Phillip Hartweg
Carl L. Henninger
Peter F. Ladesic
Diane McGinley

**Village Clerk**
Suzanne R. Connors

**Village Manager**
Mark Franz

**Civic Center**
535 Duane Street
Glen Ellyn, IL 60137
630 469-5000
Fax 630 469-8849
Web: www.glenellyn.org

**Police Department**
535 Duane Street
630 469-1187
Fax 630 469-1861

**Public Works Department**
30 South Lambert Road
630 469-6756
Fax 630 469-3128

August 5, 2011

Chris McClain
School District 87
Assistant Superintendent of Business Services
596 Crescent Boulevard
Glen Ellyn, IL 60137

Re: Memorial Field – Variance Application
Sent via email and regular mail

Dear Mr. McClain:

Village staff and consultants have reviewed the revised zoning variation application for Memorial Field submitted on July 26, 2011. A review of these materials found that the application is substantially complete and ready to be scheduled for consideration at a public hearing. However, I would still like to offer the following comments on the submitted materials.

1. Light Pole Spacing. The distance between the light poles near the first and third base lines of the softball field (lights B1 and B2) continues to be missing from the Dimensional Control and Paving plan. Please confirm that this distance complies with Section 10-5-13(M)2(b)1 of the Zoning Code or amend the application to provide this distance. Distance from B1 to B2 is 290' and therefore complies with the required code distance of 280'

2. Discrepancies. The following discrepancies in the application packet should be corrected.

   a. The Dimensional Control and Paving Plan continues to indicate a required 28.75 foot impervious surface and accessory structure setback in two locations along the northern property line. The plan should be appropriately updated to accurately reflect the required setback of 29.07 feet. This has been revised. 29.07 feet is correct.

   b. The Dimensional Control and Paving Plan indicates a proposed setback of as little as 7.5 feet for the sidewalk along the southern property line. However, the list of variations in the application packet states that the School District is requesting approval to allow an 8-foot setback in this location. This discrepancy should be corrected. This has been revised. 7.5 feet is correct.

   c. Please note that although the written information in the packet refers to a total area of 2,800 square feet for the northern bleachers, that the area of the bleachers identified on the Dimensional Control and Pavement Plan is 2,783 square feet. This has been revised. 2,800sf is correct

   d. There is a discrepancy between the batting cage setback of 1-foot identified on the Dimensional Control and Paving Plan and the setback identified in the list of variations. It is my understanding that a setback of as little as 1 foot is proposed. This has been revised. 1' is correct.

   e. The required setback for the batting cage is identified as 58.14 feet in the written materials and 58.18 feet on the Dimensional Control and Paving

Exhibit O



Plan. Based on a lot width of 581.34 feet, the required setback is 58.14 feet. This has been revised to indicate 58.14 feet.

3. List of Variations. Attached is a copy of the public hearing notice that will be published for the project. In order to avoid confusion you are encouraged to amend the list of variations in the narrative statement and quantitative summary to correspond with this list. In addition, as previously discussed, an amendment to the previously granted variation for the number of accessory buildings on the property is not needed. The application packet should be appropriately updated to reflect this change. This has been revised to match

4. Variation Application. In response to item 6(e) in the variation application it is stated that, *"the most highly attended event would be JV football. The total number of students and spectators already attending practices and games in the evening will be consistent with the current attendance during daytime hours"*. How many individuals are expected to attend JV football games and what is the current attendance at daytime practices and games? See Exhibit P for attendance numbers

5. Comments from Lighting Consultant. Attached for your information please find comments from the Village's lighting consultant, James Darnell.

As you are aware, the requests have been scheduled for consideration at a public hearing before the Plan Commission on Thursday, August 25, 2011. In order to accommodate this meeting, 20 collated copies of a complete application packet amended to respond to the above comment should be submitted to the Planning and Development Department no later than Thursday, August 11, 2011 (2 weeks prior to the hearing).

If you have any questions, feel free to contact me at 630-547-5249 or Micheles@glenellyn.org.

Sincerely,

Michele Stegall

Michele Stegall, AICP
Village Planner

Enclosures: Public Hearing Notice
Memorandum from James Darnell dated July 25, 2011

Cc: Staci Hulseberg, Planning and Development Director
Julie Tappendorf, Village Attorney
Jim Darnell, James J. Benes and Associates
Michael Meissen, District 87 Superintendent
Paul Pessetti, Legat Architects

X:\Plandev\PLANNING\DEVELOPMENT PROJECTS\Crescent\Crescent 670, Glenbard West High School\Memorial Field\Phase II - Lights, etc. ZV\Letter 2nd Review 080311.doc

Exhibit O

**NOTICE OF PUBLIC HEARING**
**BEFORE THE GLEN ELLYN PLAN COMMISSION**

Glenbard Township High School District 87, owner of property located at 671 Crescent Boulevard, commonly known as Memorial Field, is requesting approval of variations from the Glen Ellyn Zoning Code to accommodate proposed improvements to the property including new impervious surfaces, bleachers, fencing, an ornamental gate, batting cage and lights. The subject property is located on the south side of Crescent Boulevard between Park Boulevard and Park Row and is zoned CR Conservation Recreation district.

Before the Glen Ellyn Village Board can consider the requests, the Plan Commission must conduct a public hearing. The Plan Commission will conduct a public hearing to consider the requested zoning variations on **Thursday, August 25, 2011 at 7:30 p.m.** in a meeting room on the third floor of the Glen Ellyn Civic Center, 535 Duane Street, Glen Ellyn, Illinois. At the public hearing, the Plan Commission will consider the petitioner's request for approval of the following variations from the Glen Ellyn Zoning Code.

1. A variation from Section 10-5-5(B)4(3) of the Zoning Code to allow an ornamental gate with a height of 14 feet in lieu of the maximum height of 10 feet permitted.

2. A variation from Section 10-5-5(B)4(11) to allow a fence along Crescent Boulevard with a height of 6 feet 6 inches in lieu of the maximum height of 4 feet permitted.

3. A variation from Section 10-5-5(B)4(32) of the Zoning Code to allow a batting cage with a setback of 1 foot from the southern property line in lieu of the minimum setback of 58.14 feet required.

4. A variation from Section 10-5-5(C)1 of the Zoning Code to allow an impervious surface setback of as little as 7.5 feet for a proposed sidewalk along the southern property line and 0 feet to accommodate the base for the bleachers proposed along the northern property line in lieu of the minimum impervious surface setback of 29.07 feet required.

5. A variation from Section 10-5-4(A)2(a) to allow a total of 4,268 square feet of accessory structures on the property in lieu of the maximum of 1,000 square feet of accessory structures permitted. *(amendment to previous variation approved by Ordinance 5888 which permitted 1,068 square feet of accessory structures on the property and being requested to accommodate proposed bleachers)*

6. Variations from Sections 10-5-4(A)4(a) and 10-5-4(A)4(c) of the Zoning Code to allow the northern bleachers to be located 0 feet from the northern property line in lieu of the minimum 18 foot and 29.07 foot accessory structure setbacks required.

7. A variation from Section 10-5-13(M)2(b)1 of the Zoning Code to allow 70 foot tall light poles to be spaced as close as 210 feet apart in lieu of the minimum separation of 280 feet required; to allow 70 foot tall and 60 foot tall light poles to be spaced as close as 106 feet apart in lieu of the minimum separation of 260 feet required; to allow 60 foot tall light poles to be spaced as close as 78 feet apart in the lieu of the minimum separation of 240 feet

required; and to allow 60 foot tall and 70 foot tall light poles to be spaced as close as 23 and 37 feet apart respectfully from the existing 30 foot tall tennis court light poles in lieu of the minimum separation of 180 feet and 200 feet required.

8. A variation from Section 10-5-13(M)2(a)2 of the Zoning Code to allow foot-candle levels as high as 8.49 along the southern property line and 7.32 along the northern property line in lieu of the maximum foot-candle level of 3.0 permitted.

9. A variation from Section 10-5-13(M)2(c) to allow the height of the proposed light poles to exceed the height of the principal building on the site.

10. Any other zoning relief necessary to construct the project as depicted on the plans presented and available for public review or necessary to accommodate changes requested by the Plan Commission or Village Board.

The subject property is legally described as follows:

PARCEL ONE:
LOT 17 IN COUNTY CLERK'S THIRD ASSESSMENT DIVISION, IN SECTION 11, TOWNSHIP 39 NORTH, RANGE 10, EAST OF THE THIRD PRINCIPAL MERIDIAN, ACCORDING TO THE PLAT THEREOF RECORDED JULY 3, 1906 AS DOCUMENT 88053, IN DUPAGE COUNTY, ILLINOIS.

PARCEL TWO:
ALL OF BLOCK 6 IN WOODTHORP, BEING A SUBDIVISION IN THE SOUTHEAST QUARTER OF SECTION 11, TOWNSHIP 39 NORTH, RANGE 10, EAST OF THE THIRD PRINCIPAL MERIDIAN, ACCORDING TO THE PLAT THEREOF RECORDED JUNE 2, 1926 AS DOCUMENT NUMBER 214660, IN DUPAGE COUNTY, ILLINOIS.

P.I.N.: 05-11-410-014

All persons in the Village of Glen Ellyn who are interested are invited to attend the public hearing to listen and be heard. Plans related to the proposed project are available for public review in the Planning and Development Department of the Civic Center, 535 Duane Street, Glen Ellyn, Illinois. Questions related to the requests should be directed to Michele Stegall, Village Planner, 630-547-5249.

Individuals with disabilities who plan to attend the hearing and who require certain accommodations in order to allow them to observe and participate, or who have questions regarding the accessibility of the meeting or facilities, are requested to contact the Village 24 hours in advance of the meeting.

(Published in The Daily Herald on Tuesday, August 9, 2011)

X:\Plandev\PLANNING\DEVELOPMENT PROJECTS\Crescent\Crescent 670, Glenbard West High School\Memorial Field\Phase II - Lights, etc. ZV\Public Hearing Notice.doc

Exhibit O

JAMES J. BENES AND ASSOCIATES, INC.
950 Warrenville Road ▪ Suite 101 ▪ Lisle, Illinois ▪ 60532
Tel. (630) 719-7570 ▪ Fax (630) 719-7589

# MEMORANDUM

Date: July 25, 2011

To: Michele Stegall
Village Planner
Village of Glen Ellyn

From: James E. Darnell, PE, CFM
Vice President

Re: Memorial Field Lighting Phase II
Crescent Boulevard at Park Row
Job No. 1115.023

At your request we have reviewed the Zoning Variations request and revised application which includes the following items:

1. Photometric Site Plans (7 sheets), prepared by Musco Lighting of Oskaloosa, Iowa, and dated July 18, 2011.

Glenbard Township High School District 87 recently constructed a synthetic turf surface at Memorial Field, located on the Glenbard West Campus. As part of the campus master plan, additional enhancements to Memorial Field are being proposed in order to increase utilization of the facility. Among the proposed enhancements is the installation of field lighting to extend the hours of usage while providing a safe environment for the athletes. The proposed enhancements will lessen the need to bus student athletes to off-site facilities. We offer the following comments related to the proposed field lighting:

**Existing Conditions** Memorial Field is located on the southeast side of Crescent Boulevard, southwest of Park Row, and across the street from Glenbard West High School. The east portion of the site is currently occupied by tennis courts, an office & garage building, a small parking lot, a stormwater detention pond, and a basketball court. The west portion of the site is vacant and undeveloped. The central portion of the site is occupied by a synthetic turf athletic field, a softball field with a dirt infield, and dugouts. The surface of the athletic field is approximately three feet lower than the Crescent Avenue pavement and is also lower than the railroad tracks to the south.

**Proposed Lighting** The Illuminating Engineering Society of North America (IESNA), in their Technical Report RP-33, Lighting for Exterior Environments, states that when sports fields are adjacent to roadways, the sports lighting should not contribute glare onto the roadways. When sports fields are located adjacent to residential areas, the overall brightness should be carefully controlled. Poles should be at least 70 feet high for aerial

# Exhibit O



sports, such as baseball or softball. Floodlights should not be aimed above 62 degrees and should use internal louvers and external shields to help minimize light pollution.

The lighting system has been designed to illuminate both the football / soccer field and the softball field, and includes six light poles with a total of 35 luminaires. The luminaires are 1500 watt metal halide fixtures and are provided with a spill & glare light control visor. The proposed Musco lights are energy efficient and the energy cost to light the fields is estimated to be less than $5 per hour. The proposed lighting system addresses the above recommendations of IESNA RP-33.

**Hours of Operation** It is District 87's intent to require all athletic activity to conclude by 9:00 pm, with authorization to keep the lights on until 9:30 pm. This policy would be in force Monday through Saturday. Field lighting will not be permitted on Sundays. Generally, the lights will be turned on one half hour before dusk and will remain on until 9:30 pm. Therefore, the hours of operation will vary with the calendar. In the middle of November, the lights will operate from 4:15 pm to 9:30 pm, or 5h-15m per day. At the end of June and beginning of July, the lights would not be turned on until 8:00 pm, so they will be operating only 1h-30m per day. There will be no light usage on Sundays. The tables in Exhibit A of the previously submitted documents give more detail regarding hours of operation and anticipated field activities for specific weeks during the calendar year.

**Lighting Levels for Football & Soccer Fields** The industry standard average illumination for football and soccer fields varies. IESNA Technical Report RP-6 recommends the following:

- Class I — Competition – 5,000 to 10,000 spectators — 100 f/c football / 75 f/c soccer
- Class II — Competition – up to 5,000 spectators — 50 f/c football / 50 f/c soccer
- Class III — Competition – some spectators — 30 f/c football / 30 f/c soccer
- Class IV — Recreational – no spectators — 20 f/c football / 20 f/c soccer

For this application, Class III lighting is appropriate. As the softball outfield overlaps the football / soccer field, it is unlikely they will be used simultaneously. There is no need to light the softball field when the football / soccer field is in use, so the calculations are based on only 29 of the 35 luminaires being on. The proposed lighting for the football and soccer field provides an average illumination of 32.7 f/c, which closely matches the Class III recommendations.

**Lighting Levels for Softball Fields** Back in the 1980s and 1990s, the standard average illumination for softball fields varied from 10 f/c infield & 7 f/c outfield for recreational use, up to 50 f/c infield & 30 f/c outfield for professional play. Since that time, recommended lighting levels have increased. IESNA Technical Report RP-6 now recommends the following:

- Class I — Competition – 5,000 to 10,000 spectators — 150 f/c infield / 100 f/c outfield
- Class II — Competition – up to 5,000 spectators — 100 f/c infield / 70 f/c outfield
- Class III — Competition – some spectators — 50 f/c infield / 30 f/c outfield
- Class IV — Recreational – no spectators — 30 f/c infield / 20 f/c outfield

# Exhibit O



For this application, Class III lighting is appropriate. There is no need to light the football / soccer field when the softball field is in use, so the calculations are based on only 28 of the 35 luminaires being on. The proposed lighting for the softball field provides an average illumination of 50.4 f/c for the infield and 33.8 f/c for the outfield, which closely matches the Class III recommendations.

**Impacts to Vehicular Traffic on Crescent Boulevard** The proposed sports lighting should be designed so that excessive light does not spill over onto the pavement. It is important to maintain uniformity along the roadway so that drivers do not need to traverse "hot" spots. As a drivers enter a brightly lit area, their eyes take time to adjust to the higher lighting level. As they pass the brightly lit area, their eyes will take even longer to adjust back to the normal lighting level. This is especially undesirable where a high level of pedestrian traffic is anticipated, such as near a sporting event. The proximity of Crescent Boulevard to the well-lit athletic fields was thus a concern. By using internal louvers and external shields, the proposed light fixtures are able to place the required illumination on the field while greatly reducing light trespass onto the street.

The existing streetlights on Crescent Boulevard are located on the northwest side of the street only. We inspected the street after dark and measured the existing illumination on the pavement with a light meter. We found that the existing lighting level varied from 0.0 to 1.1 f/c along the northwest edge of pavement, from 0.0 to 0.8 f/c along the centerline, and from 0.0 to 0.3 f/c along the southeast edge of pavement. The average illumination is 0.19 f/c, which is substantially less than the 0.9 to 1.2 f/c normally recommended for a street like this. The lighting levels would be a bit brighter if several low tree limbs were pruned, but the southeast edge of pavement would still be relatively dark.

Fortunately, the light spill from the athletic fields will be brightest along the southeast edge of pavement, complementing the existing lighting. The submitted photometric calculations are based on all 35 luminaires being on, and show that the light spill will vary from 0.1 to 0.4 f/c along the northwest edge of pavement, from 0.2 to 0.7 f/c along the centerline, and from 0.5 to 2.6 f/c along the southeast edge of pavement. The average illumination is 0.75 f/c. Attached is a spreadsheet created to add the existing lighting to the proposed spill light. The total illumination on the pavement, with all athletic lighting turned on, will vary from 0.3 to 1.4 f/c along the northwest edge of pavement, from 0.3 to 1.3 f/c along the centerline, and from 0.6 to 2.6 f/c along the southeast edge of pavement. The average illumination will be 0.95 f/c, which is close to the recommended 0.9 to 1.2 f/c. The average to minimum uniformity ratio is only 2.0 to 2.2, so the bright spot along the southeast edge of pavement should not cause ocular discomfort. The light spill from the proposed athletic field lighting will bring the illumination levels on the pavement up to a recommended level while the potential for pedestrian crossings is highest, and will not have a negative impact on passing motorists.

**Impacts to Neighbors** The closest residential properties to Memorial Field are the single-family homes on the other side of Park Row (400 feet from the football / soccer field), apartment buildings on the south side of the railroad tracks and the Illinois Prairie Path (250

feet from the softball field), and single-family homes southwest of the apartments (the nearest one 260 feet from the football / soccer field). The photometric plan in the submittal shows that the illumination along the Park Row right-of-way will be zero. The bright spot along the south property line will be 8.5 f/c, but the illumination along the south railroad track will be 0.3 f/c or less, dropping to 0.1 f/c on the south side of the Illinois Prairie Path. Illumination provided by the existing light poles along the Prairie Path is unknown. While the nearby residents may perceive the lighting on Memorial Field to be bright, the illumination will be focused and stray light trespass will be kept to a minimum. It does not appear that the proposed lighting system will provide any measurable illumination on any residential properties.

**Existing Tennis Court Lighting** The existing tennis courts are currently illuminated by multiple floodlights on nine 30-foot high poles. The submittal states that the lights were installed by the park district when the tennis courts were constructed; and that these lights have no shielding. It also states that there are currently no restrictions on the time when the lights may be used. It is our understanding that District 87 is willing to meet with the Village at a future time to discuss retrofitting the existing lights and restricting the hours of usage to the same hours as the other athletic fields on the property.

While we do not have photometric information for the existing tennis court lighting, we estimate that their contribution to light levels on the new athletic fields will be negligible. They may add 0.1 to 0.3 f/c at the east end of the fields, but the property lines to the northwest (Crescent Boulevard) and southeast (the railroad tracks) of the new fields are too far away, and the impact of the tennis court lights at those locations will be zero.

**Requested Variances** Installation of the proposed field lighting will require three variances from the Village Code. The specific variance requests and their locations are outlined in Exhibit C of the previously submitted report. The brightest spot along the north property line, with all 35 luminaires turned on, will be 7.32 f/c at the property line and 5.43 f/c five feet past the property line. The brightest spot along the south property line, with all 35 luminaires turned on, will be 8.49 f/c at the property line and 6.14 f/c five feet past the property line. These variances are required in order to meet the illumination levels and uniformity ratios which are recommended for lighting athletic fields.

Please contact us if you have any questions or require additional information.

– end –

# Memorial Event Attendance - Games

| SPORT | ATHLETES | COACHES | SPECTATORS | TOTAL |
|---|---|---|---|---|
| FIELD HOCKEY | 44 | 4 | 70 | 118 |
| SOCCER | 42 | 4 | 70 | 114 |
| LACROSSE | 70 | 4 | 80 | 154 |
| SOFTBALL | 28 | 4 | 40 | 72 |
| FOOTBALL JV | 120 | 11 | 150 | 281 |

Away Teams Arrive by Bus



Exhibit P

# Memorial Event Attendance - Practices

| SPORT | ATHLETES | COACHES | SPECTATORS | TOTAL |
|---|---|---|---|---|
| FIELD HOCKEY | 44 | 2 | 2 | 48 |
| SOCCER | 42 | 2 | 2 | 46 |
| LACROSSE | 35 | 2 | 2 | 39 |
| SOFTBALL | 28 | 2 | 2 | 32 |
| FOOTBALL JV | 120 | 11 | 7 | 138 |



Exhibit P

# BOUNDARY AND TOPOGRAPHIC SURVEY

**BASIS OF BEARINGS:**
RECORD AND ASSUMED THE SOUTH LINE OF BLOCK 6 IN WOODTHORP TO BE:
**S 71°43'00" W**

***AREA BREAKDOWN:***

| | | |
|---|---|---|
| PARCEL ONE | 218,213 sf± | 5.01 ACRES± |
| PARCEL TWO | 134,630 sf± | 3.09 ACRES± |
| TOTAL AREA: | 352,843 sf± | 8.10 ACRES± |

**NOTES:**

1. Boundary lines as shown hereon are depicted from ALTA/ACSM Land Title Survey prepared by Midwest Technical Consultants, Inc. dated April 2, 2009.

2. Contact JULIE at 811 or 1-800-892-0123 for exact location of buried cables prior to digging (electric, gas, telephone and cable TV).

3. Gas lines as shown hereon are depicted from field location of visible evidence of lines and JULIE Design Stage Dig No. X0540776 and Joint Meet A0821230 on 3/25/2009 and response received on 3/15/2010 from Nicor in response to letter of request for location of existing utilities by Midwest Technical Consultants, Inc. dated February 23, 2010. Refer to the above referenced Note No. 2.

4. Telephone lines as shown hereon are depicted from field location of visible evidence of lines and JULIE Design Stage Dig No. X0540776 and Joint Meet A0821230 on 3/25/2009, response to letter of request for location of existing utilities by Midwest Technical Consultants, Inc. dated February 23, 2010 received from JMC Engineers & Associates, Inc. on behalf of AT&T Long Distance (T) and response received from Sprint on 3/15/2010 in response to letter of request for location of existing utilities by Midwest Technical Consultants, Inc. dated February 23, 2010. Refer to the above referenced Note No. 2.

5. Electric lines as shown hereon are depicted from field location of visible evidence of lines and JULIE Design Stage Dig No. X0540776 and Joint Meet A0821230 on 3/25/2009 and UG Locating Maps 454-11N and 454-11S received from SM&P in response to letter of request for location of existing utilities by Midwest Technical Consultants, Inc. dated February 23, 2010. Refer to the above referenced Note No. 2.

6. Utility lines as shown hereon are depicted from field location of visible evidence of lines and JULIE Design Stage Dig No. X0540776 and Joint Meet A0821230 on 3/25/2009 and response to letter of request for location of existing utilities by Midwest Technical Consultants, Inc. dated February 23, 2010 received from Wide Open West and response received from Comcast on 3/16/2010 in response to letter of request for location of existing utilities by Midwest Technical Consultants, Inc. dated February 23, 2010. Refer to the above referenced Note No. 2.

7. Watermains, sanitary and storm sewers as shown hereon are depicted from field location of visible evidence of lines and JULIE Design Stage Dig No. X0540776 and Joint Meet A0821230 on 3/25/2009 and response to letter of request for location of existing utilities by Midwest Technical Consultants, Inc. dated February 23, 2010 received from the Village of Glen Ellyn Public Works Department. Refer to the above referenced Note No. 2.

8. Sanitary sewers and storm drains were not exposed for location by surveyor. Use of these locations is subject to verification by Client, Engineer, Contractor or the Title Company. Recommended procedures are TV inspection of the interior of sanitary and storm drain lines and metal detection method used to verify the position of cast iron watermain if lines are not uncovered.

**LEGEND**

| | |
|---|---|
| EXISTING BUILDING LOCATION | FIBER OPTIC LINE |
| PARCEL LIMITS | MANHOLE |
| SECTION LINE | CURB INLET |
| QUARTER SECTION LINE | CATCH BASIN/INLET |
| QUARTER,QUARTER SECTION LINE | B-BOX |
| EXISTING R.O.W. LINE | WATER VALVE VAULT |
| EASEMENT | WATER VALVE |
| BUILDING SETBACK LINE | HYDRANT |
| SECTION CORNER | SPRINKLER HEAD |
| QUARTER SECTION CORNER | SPRINKLER CONTROL VALVE |
| P.O.C. POINT OF COMMENCEMENT | POWER POLE |
| P.O.B. POINT OF BEGINNING | ANCHOR |
| (MEAS.) MEASURED DISTANCE | LIGHT STANDARD |
| (REC.) RECORD DISTANCE | GAS VALVE |
| (COMP.) COMPUTED DISTANCE | GAS MARKER POST |
| R. RADIUS | SIGN |
| A. LENGTH OF CURVE | TRAFFIC SIGNAL VAULT |
| CB. CHORD BEARING | MAILBOX |
| FENCE LINE | PAINTED WATER MAIN MARKER |
| STORM SEWER | PAINTED TELEPHONE LINE MARKER |
| SANITARY SEWER | PAINTED ELECTRIC LINE MARKER |
| OVERHEAD WIRES | PAINTED GAS LINE MARKER |
| ELECTRIC LINE | PAINTED FIBER OPTIC MARKER |
| GAS LINE | PAINTED CABLE TELEVISION MARKER |
| TELEPHONE LINE | CONCRETE SURFACE |
| WATERMAIN LINE | GRAVEL SURFACE |
| | BITUMINOUS SURFACE |
| | WIDE OPEN WEST BURIED COAX |
| | BOREHOLE |
| | RAILROAD TRACKS |
| | ELECTRIC HAND HOLE |

**BENCHMARKS:**

NGS 0104 (PID DK3187): 3.5 inch brass disk set on the top of a concrete railing base on the southeast corner of the bridge for the Illinois Prairie Path over Taylor Avenue.

**Elevation = 731.07 NAVD 88 (Record and held)**

NGS 0104 (PID DK3187): 3.5 inch brass disk set on the top of a 3 foot high retaining wall surrounding an electrical control box 74.0 feet south of the centerline of Crescent Street and 42.5 feet east of the centerline of Main Street.

**Elevation = 745.28 NAVD 88 (Record) 745.292 (Measured)**

PARCEL ONE:
LOT 17 IN COUNTY CLERK'S THIRD ASSESSMENT DIVISION IN SECTION 11, TOWNSHIP 39 NORTH, RANGE 10 EAST OF THE THIRD PRINCIPAL MERIDIAN, ACCORDING TO THE PLAT THEREOF RECORDED JULY 3, 1906 AS DOCUMENT NUMBER 88053, IN DuPAGE COUNTY, ILLINOIS.

PARCEL TWO:
BLOCK 6 IN WOODTHORP, BEING A SUBDIVISION IN THE SOUTHEAST QUARTER OF SECTION 11, TOWNSHIP 39 NORTH, RANGE 10 EAST OF THE THIRD PRINCIPAL MERIDIAN, ACCORDING TO THE PLAT THEREOF RECORDED JUNE 2, 1926 AS DOCUMENT NUMBER 214660, IN DuPAGE COUNTY, ILLINOIS.

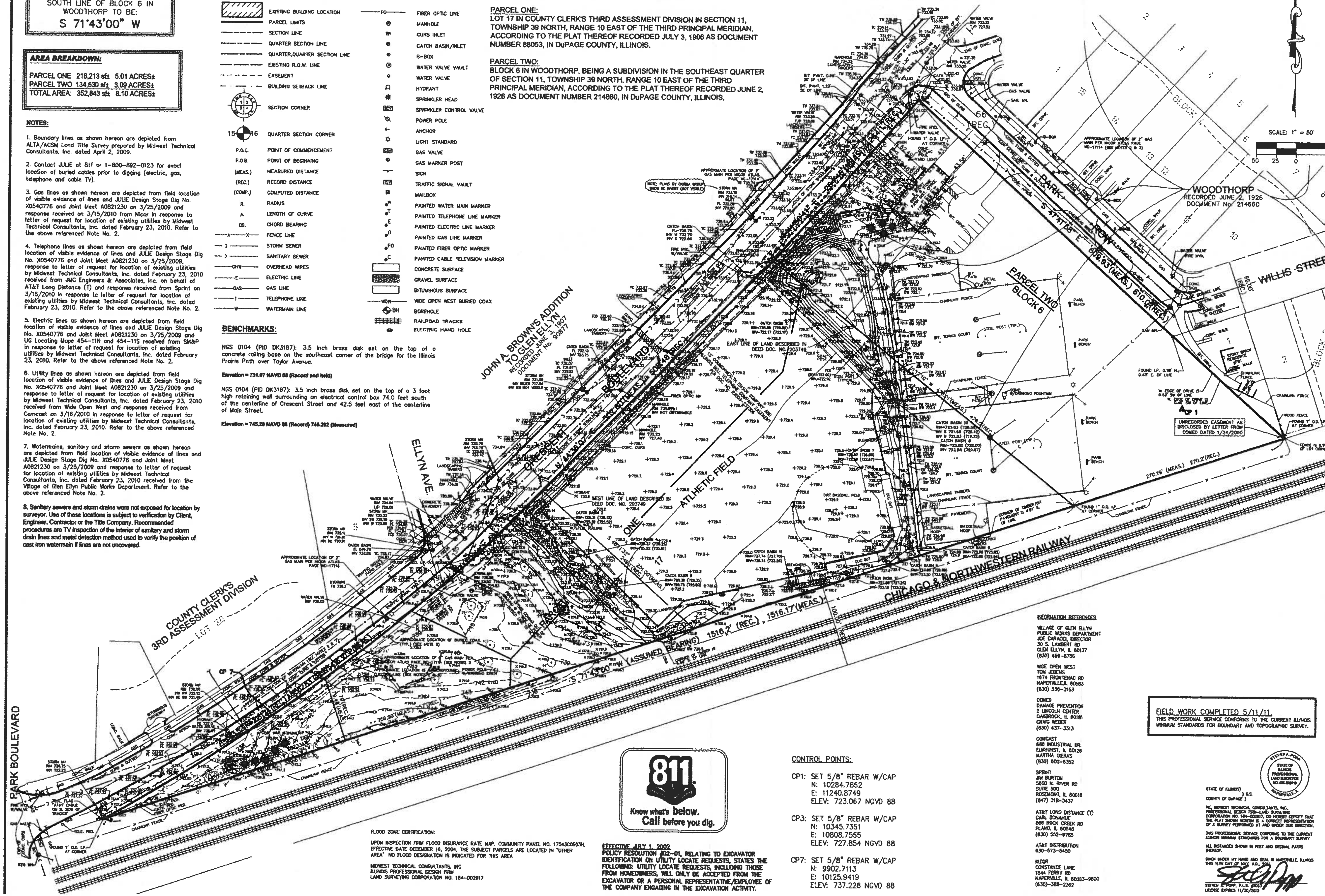


FLOOD ZONE CERTIFICATION:

UPON INSPECTION FIRM FLOOD INSURANCE RATE MAP, COMMUNITY PANEL NO. 17043C0503H, EFFECTIVE DATE DECEMBER 16, 2004, THE SUBJECT PARCELS ARE LOCATED IN "OTHER AREA" NO FLOOD DESIGNATION IS INDICATED FOR THIS AREA

MIDWEST TECHNICAL CONSULTANTS, INC
ILLINOIS PROFESSIONAL DESIGN FIRM
LAND SURVEYING CORPORATION NO. 184-002917

811 Know what's below. Call before you dig.

EFFECTIVE JULY 1, 2002
POLICY RESOLUTION #02-01, RELATING TO EXCAVATOR IDENTIFICATION ON UTILITY LOCATE REQUESTS, STATES THE FOLLOWING: UTILITY LOCATE REQUESTS, INCLUDING THOSE FROM HOMEOWNERS, WILL ONLY BE ACCEPTED FROM THE EXCAVATOR OR A PERSONAL REPRESENTATIVE/EMPLOYEE OF THE COMPANY ENGAGING IN THE EXCAVATION ACTIVITY.

CONTROL POINTS:

CP1: SET 5/8" REBAR W/CAP
N: 10284.7852
E: 11240.8749
ELEV: 723.067 NGVD 88

CP3: SET 5/8" REBAR W/CAP
N: 10345.7351
E: 10808.7555
ELEV: 727.854 NGVD 88

CP7: SET 5/8" REBAR W/CAP
N: 9902.7113
E: 10125.9419
ELEV: 737.228 NGVD 88

INFORMATION REFERENCES

VILLAGE OF GLEN ELLYN
PUBLIC WORKS DEPARTMENT
JOE CARACCI, DIRECTOR
30 S. LAMBERT RD
GLEN ELLYN, IL 60137
(630) 469-6756

WIDE OPEN WEST
TOM JEBENS
1674 FRONTENAC RD
NAPERVILLE,IL 60563
(630) 536-3153

COMED
DAMAGE PREVENTION
2 LINCOLN CENTER
OAKBROOK, IL 60181
CRAIG WEBER
(630) 437-3313

COMCAST
688 INDUSTRIAL DR.
ELMHURST, IL 60126
MARTHA GIERAS
(630) 600-6352

SPRINT
JIM BURTON
5600 N. RIVER RD
SUITE 500
ROSEMONT, IL 60018
(847) 318-3437

AT&T LONG DISTANCE (T)
CARL DONAHUE
888 ROCK CREEK RD
PLANO, IL 60545
(630) 552-9785

AT&T DISTRIBUTION
630-573-5450

NICOR
CONSTANCE LANE
1844 FERRY RD
NAPERVILLE, IL 60563-9600
(630)-388-2362

FIELD WORK COMPLETED 5/11/11.
THIS PROFESSIONAL SERVICE CONFORMS TO THE CURRENT ILLINOIS MINIMUM STANDARDS FOR BOUNDARY AND TOPOGRAPHIC SURVEY.

STEVEN A. POPP, STATE OF ILLINOIS PROFESSIONAL LAND SURVEYOR NO. 035-003010, NAPERVILLE, IL

STATE OF ILLINOIS)
} S.S.
COUNTY OF DuPAGE )

WE, MIDWEST TECHNICAL CONSULTANTS, INC., PROFESSIONAL DESIGN FIRM-LAND SURVEYING CORPORATION NO. 184-002917, DO HEREBY CERTIFY THAT THE PLAT SHOWN HEREON IS A CORRECT REPRESENTATION OF A SURVEY PERFORMED AT AND UNDER OUR DIRECTION.

THIS PROFESSIONAL SERVICE CONFORMS TO THE CURRENT ILLINOIS MINIMUM STANDARDS FOR A BOUNDARY SURVEY

ALL DISTANCES SHOWN IN FEET AND DECIMAL PARTS THEREOF.

GIVEN UNDER MY HAND AND SEAL IN NAPERVILLE, ILLINOIS THIS 11TH DAY OF MAY A.D., 2011.

STEVEN A. POPP, P.L.S. #3010
LICENSE EXPIRES 11/30/2012

| NO. | DATE | DESCRIPTION | BY |
|---|---|---|---|
| 2 | 5/11/11 | ADDITIONAL TOPO | TL |
| 1 | 3/18/10 | PER UTILITY RESPONSES | JB |
| - | 3/8/10 | ISSUED | JB |

BOUNDARY AND TOPOGRAPHIC SURVEY
MEMORIAL PARK
GLEN ELLYN, IL

PREPARED FOR: GLENBARD HIGH SCHOOL DISTRICT #87
JOB NO: 359-108
SCALE: 1"=50'
DRAWN BY: JB
DATE ISSUED: 3/11/11

MIDWEST TECHNICAL CONSULTANTS, INC.
LAND SURVEYORS
1805 MILL STREET SUITE L
NAPERVILLE, ILLINOIS 60563
PROFESSIONAL DESIGN FIRM
LAND SURVEYING CORPORATION NO. 184-002917
TELEPHONE: (630) 505-0101
FACSIMILE: (630) 505-0318

NOTES:
- FOR BUILDING RESTRICTIONS AND EASEMENTS NOT SHOWN HEREON, REFER TO YOUR ABSTRACT, DEED, GUARANTEE POLICY AND LOCAL ORDINANCES.
- COMPARE ALL POINTS BEFORE BUILDING AND REPORT ANY DIFFERENCE AT ONCE.
- ALL MEASUREMENTS TAKEN FROM CONCRETE FOUNDATION

SHEET 1 OF 1

MIDWEST TECHNICAL CONSULTANTS, INC © ALL RIGHTS RESERVED

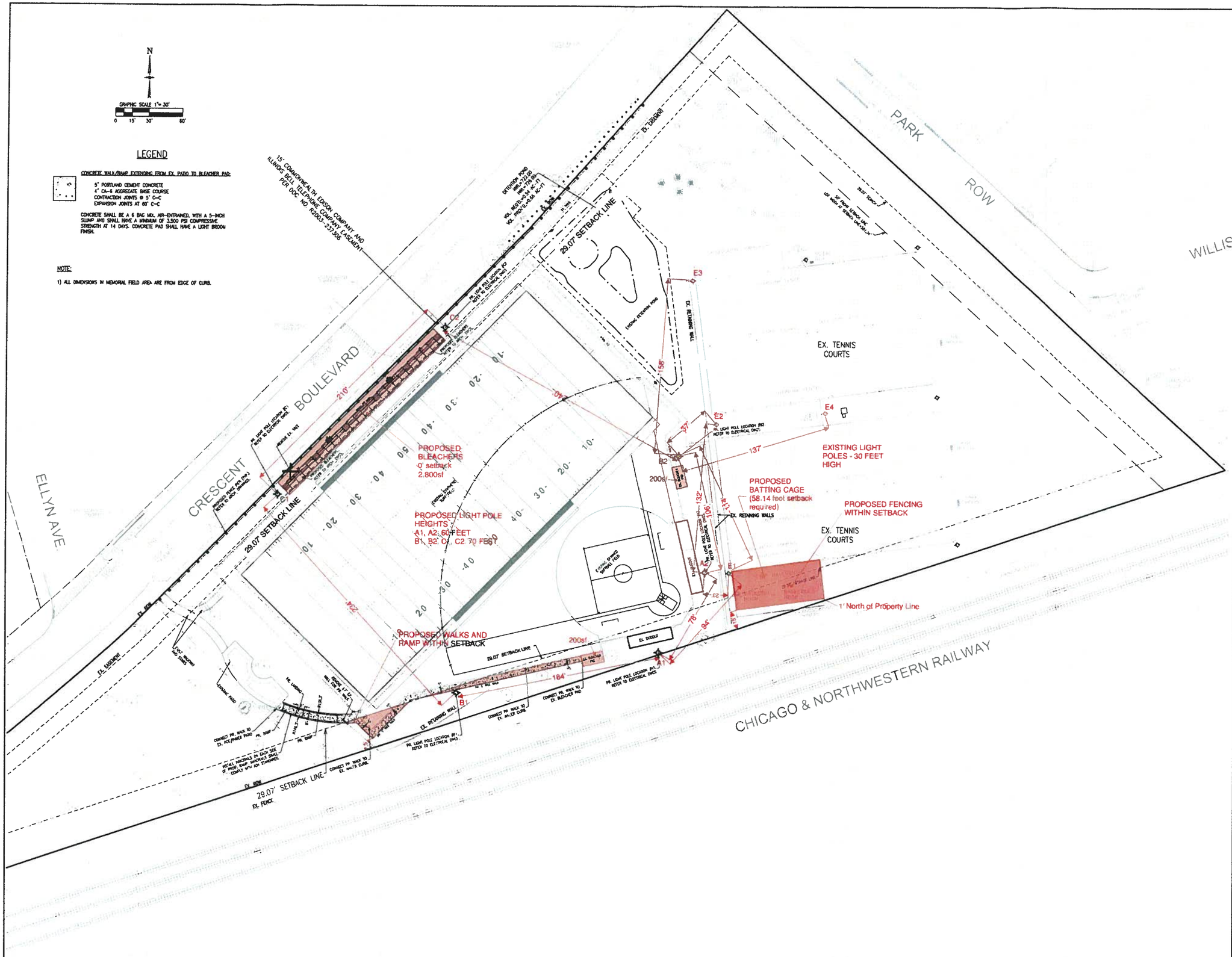


LEGATARCHITECTS
sustainability performance design

GLENBARD
T H S.D. 87

**MEMORIAL FIELD VARIANCE**

WEST H.S.Glen Ellyn IL 60137

ARCHITECT
Legal Architects
2015 Spring Road, Suite 175
Oak Brook, IL 60523
P. 630.990.3535
F. 630.990.3541
www.legat.com

CIVIL ENGINEER
Jacob & Hefner Associates
1901 South Meyers Road, Suite 180
Oakbrook Terrace, Illinois 60181
P 630.652.4521
F. 630.652.4601
www.jacobandhefner.com

SIGNATURE
DATE

REVISIONS

| NO. | DESCRIPTION | DATE |
|---|---|---|
| 1 | ORIGINAL PLAN DATE | 12.7.09 |
| 2 | REVISED PER VILLAGE | 5/13/11 |
| | | |
| | | |
| | | |
| | | |

| | |
|---|---|
| PROJECT NUMBER | 210090.00 |
| DATE OF ISSUE | 12.07.2010 |
| DRAWN BY | M.Z. |
| CHECKED BY | W.B. |

DIMENSIONAL CONTROL & PAVING PLAN

C1

NOT FOR CONSTRUCTION

GRADING & EROSION CONTROL NOTES:

1) ALL SPOT ELEVATIONS ARE TOP OF PAVEMENT, TOP OF TURF OR FINISHED GRADE ELEVATIONS UNLESS SPECIFIED OTHERWISE. TOP OF TURF=TOP OF INFILL.

2) ALL EROSION AND SEDIMENT CONTROL MEASURES SHALL BE IN PLACE PRIOR TO START OF CONSTRUCTION.

3) CONTRACTOR SHALL MAINTAIN POSITIVE SITE DRAINAGE DURING CONSTRUCTION.

4) ALL PROPOSED GRADES SHALL MATCH EXISTING GRADES AT THE LIMITS OF CONSTRUCTION OR PROPERTY LINE.

5) SEE SPECIFICATIONS FOR SUBGRADE AND STRUCTURAL FILL COMPACTION REQUIREMENTS.

6) DUST CONTROL MEASURES SHALL BE IMPLEMENTED BY THE CONTRACTOR TO PREVENT SOIL FROM LEAVING THE SITE. ACCEPTABLE DUST CONTROL MEASURES INCLUDE WATERING, WIND BREAKS AND MULCH.

7) THE CONTRACTOR SHALL MAINTAIN PUBLIC ROADWAYS CLEAN OF ANY AND ALL MATERIALS AND DEBRIS WHICH RESULT FROM CONSTRUCTION OPERATIONS.

8) ALL PROPOSED GREEN AREAS SHALL BE DRESSED WITH A MINIMUM OF 6" OF TOPSOIL AND SEEDED WITH ATHLETIC FIELD SEED MIX. REFER TO PROJECT SPECIFICATIONS FOR ATHLETIC SEED MIX. EXCELSIOR BLANKET SHALL BE PLACED IN ALL SEEDED AREAS.

9) ALL TEMPORARY AND PERMANENT EROSION AND SEDIMENT CONTROL PRACTICES MUST BE MAINTAINED AND REPAIRED AS NEEDED TO ASSURE EFFECTIVE PERFORMANCE OF THEIR INTENDED FUNCTION.

10) ANY SEDIMENT REACHING A PUBLIC OR PRIVATE ROAD SHALL BE REMOVED BY SHOVELING OR STREET CLEANING (NOT FLUSHING) BEFORE THE END OF EACH WORKDAY.

11) ALL TEMPORARY EROSION AND SEDIMENT CONTROL MEASURES SHALL BE DISPOSED OF WITHIN 30 DAYS AFTER THE FINAL SITE STABILIZATION IS ACHIEVED WITH PERMANENT SOIL STABILIZATION MEASURES.

12) DISTURBED AREAS SHALL BE STABILIZED WITH TEMPORARY OR PERMANENT MEASURES WITHIN 7 CALENDAR DAYS FOLLOWING THE END OF ACTIVE DISTURBANCE OR REDISTURBANCE.

13) STOCKPILES OF SOIL AND OTHER BUILDING MATERIALS TO REMAIN IN PLACE MORE THAN 3 DAYS SHALL BE FURNISHED WITH EROSION AND SEDIMENT CONTROL MEASURES (I.E. PERIMETER SILT FENCE). EXCEPT AS PROVIDED IN PARAGRAPHS (A) AND (B) BELOW, STABILIZATION MEASURES SHALL BE INITIATED AS SOON AS PRACTICABLE IN PORTIONS OF THE SITE WHERE CONSTRUCTION ACTIVITIES HAVE TEMPORARILY OR PERMANENTLY CEASED, BUT IN NO CASE MORE THAN 7 DAYS AFTER THE CONSTRUCTION ACTIVITY IN THAT PORTION OF THE SITE HAS TEMPORARILY OR PERMANENTLY CEASED AS FOLLOWS:
   A. WHERE THE INITIATION OF STABILIZATION MEASURES BY THE 7th DAY AFTER CONSTRUCTION ACTIVITY TEMPORARILY OR PERMANENTLY CEASES ON A PORTION OF THE SITE IS PRECLUDED BY SNOW COVER, STABILIZATION MEASURES SHALL BE INITIATED AS SOON AS PRACTICABLE.
   B. WHERE CONSTRUCTION ACTIVITY WILL RESUME ON A PORTION OF THE SITE WITHIN 14 DAYS FROM WHEN ACTIVITIES CEASED (E.G. THE TOTAL TIME PERIOD THAT CONSTRUCTION ACTIVITY IS TEMPORARILY CEASED IS LESS THAN 14 DAYS) THEN STABILIZATION MEASURES DO NOT HAVE TO BE INITIATED ON THAT PORTION OF SITE BY THE 7th DAY AFTER CONSTRUCTION ACTIVITY TEMPORARILY CEASED.

14) OVERLAND FLOOD ROUTE DENOTED BY: ⟹ : 100-YR STORM SEWER DENOTED BY: ⟹

15) FILL MATERIAL WITHIN NON-STRUCTURAL AREAS SHALL BE COMPACTED TO A MINIMUM OF 90% OF MAXIMUM DENSITY IN ACCORDANCE WITH ASTM SPECIFICATION D1557 (MODIFIED PROCTOR METHOD). EMBANKMENT MATERIAL WITHIN STRUCTURAL FILL AREAS (I.E. ARTIFICIAL TURF FIELD) SHALL BE COMPACTED TO A MINIMUM OF 95% OF MAXIMUM DENSITY OR TO SUCH OTHER DENSITY AS MAY BE DETERMINED APPROPRIATE BY THE SOILS ENGINEER.

16) TREES TO BE PROTECTED DURING CONSTRUCTION INDICATED BY: (TP)

17) INLET PROTECTION DENOTED BY: (IP)

18) PERMANENT SEEDING DENOTED BY: (PS)

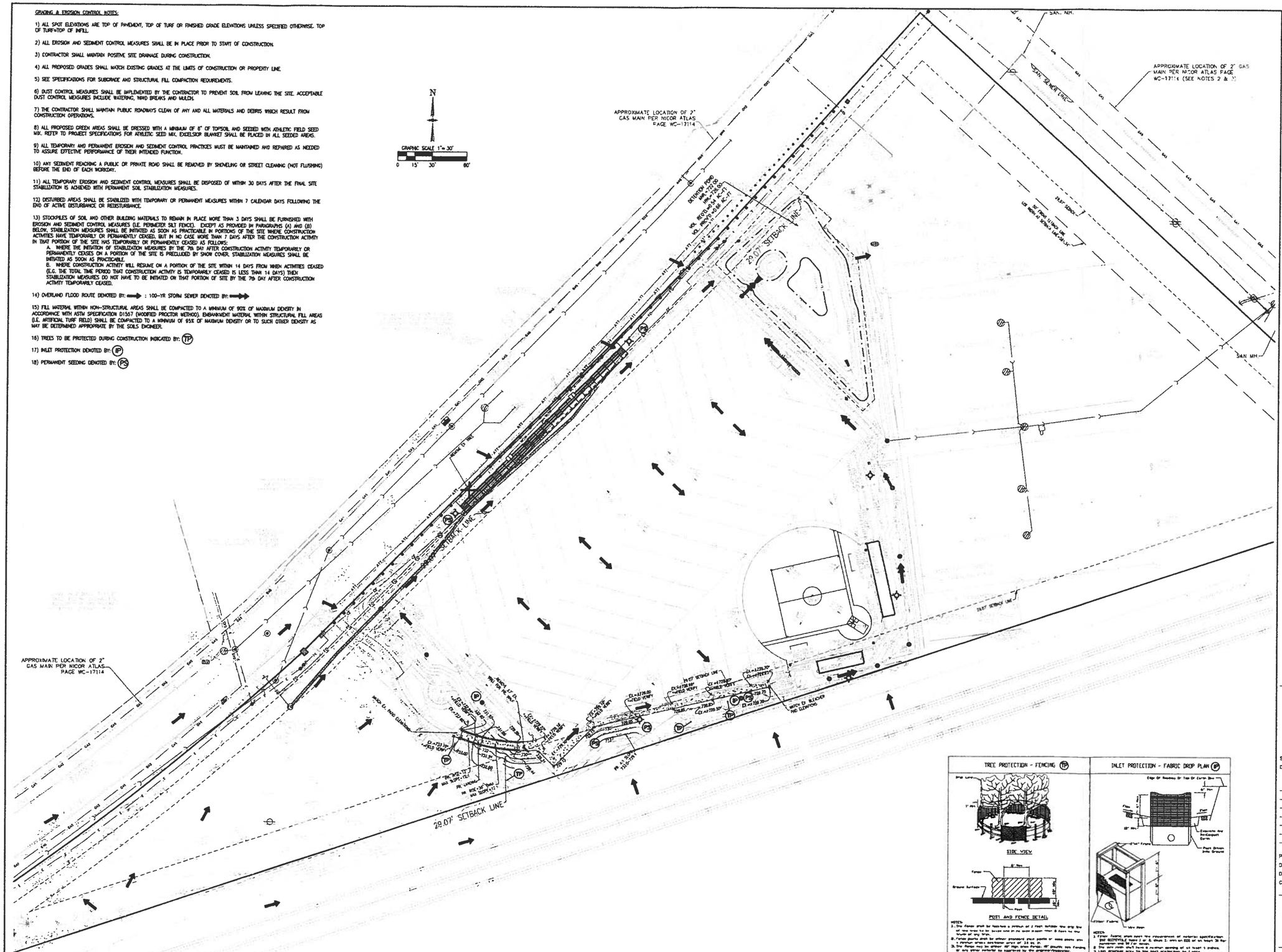
N
GRAPHIC SCALE 1"= 30'
0 15' 30' 60'
APPROXIMATE LOCATION OF 2" GAS MAIN PER NICOR ATLAS PAGE WC-17114
APPROXIMATE LOCATION OF 2" GAS MAIN PER NICOR ATLAS PAGE WC-17114 (SEE NOTES 2 & 3)
SAN. MH.
SAN. MH.
29.07' SETBACK LINE
29.07' SETBACK LINE
29.07' SETBACK LINE
INLET SETBACK LINE
BLOCK D LINE
24.83' SEWER
30' FROM SEWER PER UR BOND & SEWER ORD.
DETERMINE EXISTING ROAD MUNI. 722.50 MHB. 722.50 VCL 722.50 AC-71 VCL 722.50 MHB 722.50 AC-71
MATCH EX. BLOCKER PER ELEVATIONS
MATCH EX. PAVED GUTTER
PROP. 12" RCP
PROP. 18" RCP
PROP. 24" RCP
PROP. 36" RCP
PROP. 36" RCP
PROP. 36